HITACHI

SERVICE MANUAL

TK | No. 3372E

VM-E10A(U,C)

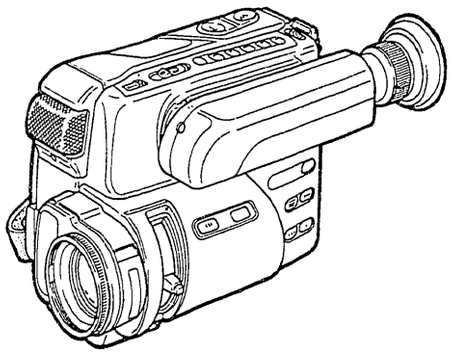

Technical Data

MANUAL RELATED TO THE VM-E10A

TITLE	MODEL	MANUAL NO.
Technical Information	VM-E10A	No. 3373E
RF UNIT	VM-RF85A	No. ——
POWER ADAPTER /CHARGER	VM-AC80A	No. 3311E

SPECIFICATIONS

■ General	
Power requirements	6V DC
Power consumption	6.1 watts (When "FOCUS" switch to "MANUAL".)
Dimensions	4-3/8"(W) x 4-3/16"(H) x 6-15/16"(D) 111(W) x 106(H) x 176(D) mm
Weight	1.74 lbs (0.79 kg)
Operating temperature	32°F ~ 104°F
Storage temperature	−4°F ~ 140°F
■ Video Recorder Section	
Format	8mm
Record/playback system	Two video record/playback heads
Video signal	EIA standard NTSC color
Tape speed	14.3 mm/sec.
Video input	1.0 Vp-p, 75 ohm
Video output	1.0 Vp-p, 75 ohm
Audio input	−7.8 dBs (316 m Vrms)
Audio output	−7.8 dBs (316 m Vrms)
Fast forward/rewind time	Less than 8 minutes with P6-120 cassette
■ Camera Section	
Scanning	525 lines/60 fields/30 frames
Required minimum illumination	3 lux
Pickup device	1/2" C.C.D
Lens diameter	34 mm

8

SAFETY PRECAUTIONS

The following precautions should be observed when servicing.

1. Since many parts in the unit have special safety-related characteristics, always use genuine Hitachi replacement parts. Especially critical parts in the power circuit block should not be replaced with other makers'! Critical parts are marked with ⚠ in the schematic diagram.
2. Before returning a repaired unit to the customer, the service technician must thoroughly test the unit to ascertain that it is completely safe to operate without danger of electrical shock.

X-RAY RADIATION

The primary source of X-ray radiation in this viewfinder is the picture tube. The tube used in this viewfinder is especially constructed to limit X-ray radiation emission. For continued X-ray radiation protection, the replacement tube must be the same type as the original, Hitachi approved one.

SPECIFICATIONS AND PARTS ARE SUBJECT TO CHANGE FOR IMPROVEMENT

8mm VIDEO CAMERA/RECORDER

November 1990 TOKAI WORKS

CAUTION AGAINST FUSE REPLACEMENT

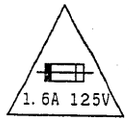

CAUTION: FOR CONTINUED PROTECTION AGAINST RISK OF FIRE, REPLACE ONLY WITH SAME TYPE 1.6A, 125V FUSE.

ATTENTION: AFIN D'ASSURER UNE PROTECTION PERMANENTE CONTRE LES RISQUES D'INCENDIE, REMPLACER UNIQUEMENT PAR UN FUSIBLE DE MEME TYPE ET DE 1.6A, 125V.

This symbol indicates Fast Operating Type Fuse.

CONTENTS

CHAPTER 1 IDENTIFICATION AND OPERATION OF CONTROLS 1-1

CHAPTER 2 DISASSEMBLY

1. SEPARATING THE CAMERA SECTION AND VCR SECTION 2-1
   1-1. Electronic Viewfinder (EVF) .. 2-1
   1-2. Cassette Lid, Microphone (MIC) 2-1
   1-3. Separating the Camera Section and VCR Section 2-1
2. CAMERA SECTION (LEFT CASE SIDE) REMOVAL 2-2
   2-1. Process Circuit Board, Sensor Circuit boar, Lens Block, Control Switch, Left Case 2-2
3. VCR SECTION (RIGHT CASE SIDE) REMOVAL 2-2
   3-1. Right Case, VCR Block 2-3
   3-2. Main Circuit Board 2-3
   3-3. Function Switch, Jack Circuit board 2-3
   3-4. DC-DC Converter, Fuse Circuit Board, Power Save Switch 2-4
   3-5. VCR Frame 2-4
   3-6. Zoom Switch, Tape Transport Mechanism 2-4

MAIN MECHANICAL COMPONENTS IDENTIFICATION (SUB CHASSIS) 2-5
MAIN MECHANICAL COMPONENTS IDENTIFICATION (MAIN CHASSIS) 2-5

4. SUB CHASSIS ASSEMBLY REMOVAL 2-6
   4-1. Main Chassis Bracket (1), (2) 2-6
   4-2. Cassette Holder 2-6
   4-3. Sub Chassis Cover 2-6
   4-4. Reel Drive Idler, Supply Reel Brake, Tension Relay Arm, Tension Control Arm 2-7
   4-5. Pressure Roller, Take-up Guide Arm, Middle Pole 2-7
   4-6. Sub Chassis Assembly 2-7
5. MAIN MECHANICAL COMPONENTS ON THE SUB CHASSIS REMOVAL 2-8
   5-1. Cassette Holder Damper 2-8
   5-2. Sub Chassis Slide Stopper 2-8
   5-3. Tension Arm, Supply Guide Roller (3), Tension Band, Guide Roller Spring 2-8
   5-4. Take-up Brake Control Arm, Take-up Brake Drive Arm, Take-up Reel Brake, Take-up Reel Disk 2-9
   5-5. Take-up Guide Roller Base, Supply Guide Roller Base 2-9
   5-6. Take-up Guide Roller Rail, Supply guide Roller Rail, Supply Reel Disk 2-9
   5-7. Trouble Sensor Assembly 2-10
6. MAIN MECHANICAL COMPONENTS ON THE MAIN CHASSIS REMOVAL 2-10
   6-1. Sub Chassis Slide Arm, Supply Brake Gear 2-10
   6-2. Cylinder Assembly 2-10
   6-3. Capstan Motor, Guide Roller Relay Rail (1) 2-11
   6-4. Supply Guide Roller (2), Supply Tape Guide, Loading Motor 2-11
   6-5. Loading Gears (1), (2), (3), Mechanical State Switch, Support Plate 2-11
   6-6. Supply Loading Cam Gear 2-12
   6-7. Center Gear, Center Relay Gear, Reel Drive Belt 2-12
   6-8. Pressure Roller Drive Arm, Eject Arm, Take-up Loading Cam Gear 2-12
   6-9. Cylinder Base, Guide Roller Relay Rail (2), Slide Gear ... 2-13
   6-10. Reel Drive Belt Cover 2-13
   6-11. Cassette Holder Switch/ Dew Sensor 2-13
7. LENS BLOCK REMOVAL 2-14
   7-1. Autofocus Circuit Board, Zoom Motor 2-14
   7-2. Focus Motor, Iris Block 2-14
   7-3. AF Block 2-14
   7-4. Index Ring 2-15
8. ELECTRONIC VIEWFINDER (EVF) REMOVAL 2-15
   8-1. EVF Shoe 2-15
   8-2. EVF Lens Block, EVF Right Case 2-15
   8-3. EVF Left Case, Electronic Viewfinder (EVF) Circuit Board, CRT 2-16
   8-4. EVF Cable 2-16

JIG AND TAPES FOR ADJUSTMENT 3-1

HOW TO USE THE NEW JIGS AND TOOLS 3-2

CHAPTER 3 MECHANISEM ADJUSTMENT

1. BEFORE STARTING ADJUSTMENT 3-3
2. PHASE MATCHING IN ASSEMBLY 3-3
3. SUB CHASSIS SLIDE AMOUNT ADJUSTMENT..... 3-4
4. TAPE TRANSPORT SYSTEM CHECK/ADJUSTMENT 3-5
   4-1. REEL DISK HEIGHT ADJUSTMENT 3-5
   4-2. TENSION POLE POSITION ADJUSTMENT 3-5
   4-3. TENSION ADJUSTMENT 3-6
   4-4. SUPPLY GUIDE ROLLER (2) HEIGHT ADJUSTMENT 3-6
   4-5. TAKE-UP GUIDE POLE/TAKE-UP GUIDE POST HEIGHT ADJUSTMENT 3-7
   4-6. SUPPLY GUIDE ROLLER (1)/ TAKE-UP GUIDE ROLLER HEIGHT ADJUSTMENT 3-8
5. ADJUSTMENT AFTER REPLACING THE CYLINDER 3-8
6. CHECKING THE TORQUES 3-9

CHAPTER 4 ELECTRONIC ADJUSTMENT

1. CONNECTION FOR ADJUSTMENT 4-1
2. CAMERA SECTION ADJUSTMENT 4-1
   2-1. CIRCUIT BOARD LOCATIONS 4-1
   2-2. TEST EQUIPMENT AND CHARTS NECESSARY FOR ADJUSTMENT 4-1
   2-3. ADJUSTMENT CONDITIONS 4-1
   2-4. PRESET POSITION OF SWITCHES AND CONTROLS DURING ADJUSTMENT 4-2
   2-5. LIST OF CHARTS FOR CAMERA ADJUSTMENT 4-2
   2-6. ADJUSTMENT AFTER REPLACING MAJOR COMPONENTS IN THE CAMERA BLOCK 4-2
   2-7. CAMERA ADJUSTMENT 4-3
      (1) Sub Carrier Frequency Confirmation 4-3
      (2) Sensor Drive Pulse Lock Voltage Adjustment 4-3
      (3) Backfocus Adjustment 4-4
      (4) Sensor Sub Voltage Adjustment 4-4
      (5) Luminance Setup Level Adjustment 4-5
      (6) AIC Level Adjustment 4-5
      (7) Matrix Adjustment 4-5
      (8) White Balance Hold Voltage Setting 4-5
      (9) R-Y/B-Y Setup Adjustment 4-6
      (10) White Balance Adjustment 4-6
      (11) Chroma Level Adjustment 4-6
      (12) Program AE Adjustment 4-7
   2-8. ELECTRONIC VIEWFINDER (EVF) ADJUSTMENT 4-7
      (1) Deflection Yoke Position Adjustment 4-7
      (2) EVF Centering Adjustment 4-7
      (3) EVF Vertical Size Adjustment 4-7
      (4) EVF Brightness Adjustment 4-7
      (5) EVF Focus Adjustment 4-8
   2-9. AUTOFOCUS ADJUSTMENT 4-8
      (1) Autofocus Sensor Position Adjustment 4-8
   2-10. ADJUSTMENT WHICH CAN BE USING A VECTORSCOPE 4-8
   2-11. ADJUSTMENT COMPONENTS LOCATION 4-9
3. VCR SECTION ADJUSTMENT 4-9
   3-1. CIRCUIT BOARD LOCATIONS AND SERVICING POSITION 4-10
   3-2. TEST EQUIPMENT AND ALIGNMENT TAPES NECESSARY FOR ADJUSTMENT 4-10
   3-3. ADJUSTMENT CONDITIONS 4-10
   3-4. PRESET POSITION OF SWITCHES AND CONTROLS DURING ADJUSTMENT 4-10
   3-5. ADJUSTMENT AFTER REPLACING MAJOR COMPONENTS IN THE VCR BLOCK 4-11
   3-6. SYSTEM CONTROL CIRCUIT AND SERVO CIRCUIT SECTION 4-12
      (1) Setting the Head Switching Point 4-12
      (2) Setting the Power Shut Off Level..... 4-13
   3-7. LUMINANCE/CHROMA SECTION 4-13
      (1) AGC Adjustment 4-13
      (2) Comb Filter Adjustment 4-14
      (3) Trap Freguency Adjustment 4-14
      (4) Emphasis Input Level Adjustment 4-14
      (5) Carrier Frequency Adjustment 4-15
      (6) Deviation Adjustment 4-15
      (7) Playback Luminance Signal Level Adjustment 4-15
      (8) Record Luminance Signal Level Adjustment 4-16
      (9) Record Chroma Signal Level Adjustment 4-16
   3-8. ADJUSTMENT COMPONENTS LOCATION 4-16

CHAPTER 5 SCHEMATIC DIAGRAM AND CIRCUIT BOARD DIAGRAM

WHEN USING THIS SERVICE REFERENCE MATERIAL 5-1
LEADLESS COMPONENT IDENTIFICATION ... 5-2
CIRCUIT BOARD CONNECTION DIAGRAM 5-3

	SCHEMATIC DIAGRAM		*CIRCUIT BOARD*
SENSOR	5-4	/	5-4
PROCESS (SENSOR DRIVE/PROCESS)	5-6	/	5-10
PROCESS (ENCODER)	5-8	/	5-10
PROCESS (SUB SYSTEM CONTROL)	5-12	/	5-10
ELECTRONIC VIEWFINDER (EVF) · INDICATOR	5-14	/	5-14
FUSE	5-15	/	5-15
MAIN (SYSTEM CONTROL)	5-16	/	5-24, 26
MAIN (TROUBLE SENSOR)	5-18	/	5-24, 26
MAIN (MOTOR DRIVE)	5-19	/	5-24, 26
MAIN (SERVO)	5-20	/	5-24, 26
MAIN (PRE AMP)	5-22	/	5-24, 26
MAIN (CHROMA)	5-23	/	5-24, 26
MAIN (LUMINANCE)	5-28	/	5-24, 26
JACK	5-30	/	5-31

CHAPTER 6 EXPLODED VIEW

CABINET SECTION 6-1
MAIN CHASSIS SECTION 6-2
MAIN SUB CHASSIS SECTION 6-3
ELECTRONIC VIEWFINDER (EVF) SECTION 6-4
LENS SECTION 6-4
LUBRICATION 6-5
USING SCREWS AND WASHERS 6-5

CHAPTER 7 REPLACEMENT PARTS LEST 7-1

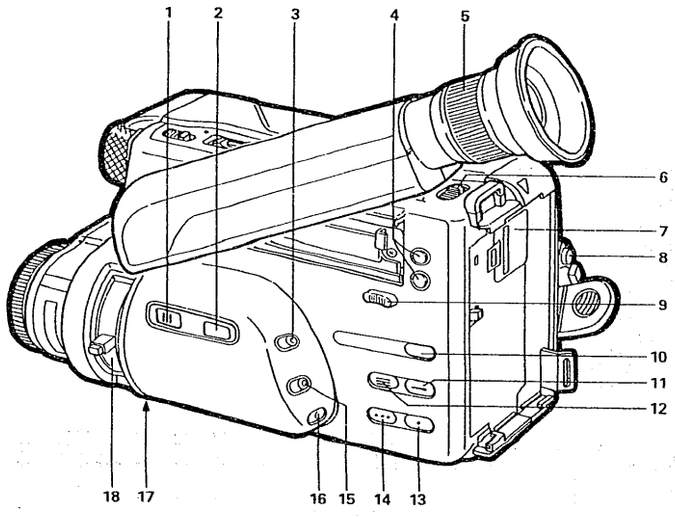

1. **"SHUTTER" Speed Control Button**
Used to control the shutter speed during recording and/or record/pause (stand-by) mode.

2. **"BLC" Button**
When the subject is lit from behind, press and hold this button to compensate for the back-lighting.

3. **"FADE" Button**
During recording you can add a professional touch to your recordings by fading in and out of scenes.
NOTE: When you use "FADE" button to fade in and out, the sound will also fade in and out with the picture.

4. **"DATE/TIME" Set Buttons**
These buttons are used to set the clock (time and date) in your camera/recorder so it can be recorded on your tapes for future reference.

5. **Diopter Control**
To use the electronic viewfinder without eyeglasses on, turn this control ring for your optimum focus adjustment.

6. **"BATTERY" Release Lever**
Releases the battery, AC adapter/charger or battery case attached to the camera/recorder.

7. **Clock Battery Compartment**
Pull the tab to open the cover and install the clock battery (provided).

8. **"REC START/STOP" Button**
This button is used to control the camera/recorder. When this button is pressed with the camera/recorder set to the recording mode, the tape runs to start recording. "REC" appears in the viewfinder.
When this button is pressed again, "PAUSE" appears instead of "REC" and the tape stops and the camera/recorder enters the record/pause (stand-by) mode.

9. **"EVF RELEASE" Button**
Press and hold this button to set the EVF (Electronic Viewfinder) back to its original position after use. This button has no effect when the viewfinder is being pulled out.

10. **"TITLE" Button**
Press this button to create and record personalized titles on your videos with the camera/recorder's built-in titler.

11. **"TIME LAPSE/SELF TIMER" Button**
This button is used when performing self-timer, time lapse and one-shot recording.

12. **"AV DUB" Button**
This button is used to record new audio and video in place of existing audio and video.

13. **"C.RESET" Button**
When the linear time counter is displayed in the viewfinder, pressing this button resets the counter to "0:00:00".

14. **"DISPLAY" Button**
Pressing this button once causes a 5 digit linear time counter and battery indicator to appear in the camera/recorders viewfinder. Pressing the button again will cause the battery indicator and linear time counter with memory to appear. Pressing a 3rd time will cause battery indicator and amount of time remaining on the cassette to appear.
Press a 4th time to delete all displays.

15. **"DATE/TIME" Button**
Press this button to display the date and clock in the viewfinder.
Whenever the date and clock appear in the viewfinder, they will be recorded on the tape.

16. **"REVIEW" Button**
Used to review the last few seconds of the recorded segment in the record/pause mode.

17. **"FOCUS" Switch**
Set this switch to the "AUTO" position for automatic focusing, and to the "MANUAL" position for focusing with the focus ring.
Auto focusing can also be performed during the manual focus mode by pressing and moving this switch to the left.

18. **Zoom Ring (Manual Zooming)**
The picture size can be magnified 6 times with the use of the zoom feature. Just rotate the zoom ring for a close up (T) or wide angle (W) picture.
Macro close-up, as close as 1 cm from object, is feasible.

CAUTION:
Do not hold the unit by the electronic viewfinder when carrying as this could cause a malfunction.

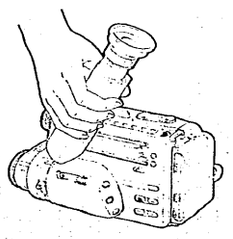

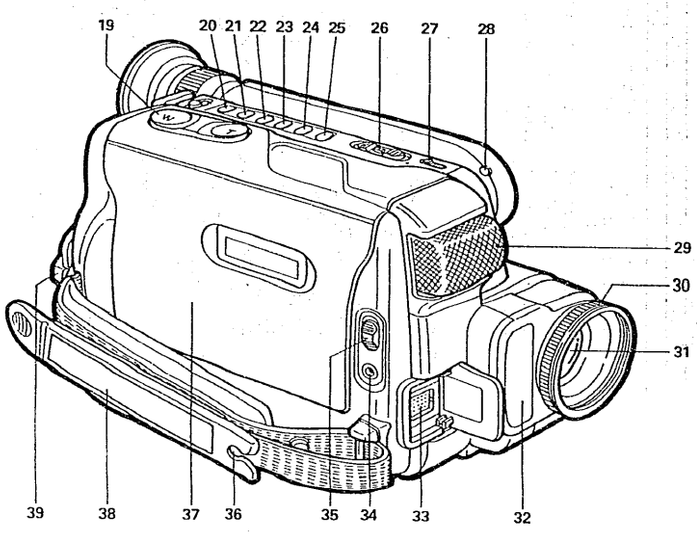

19. **Power Zoom Switch**
This switch performs zooming electrically.
"W": Picture becomes wider gradually.
"T": Picture becomes telescopic gradually.

20. **"PAUSE" Button**
When this button is pressed in the playback mode, the tape stops and you can view a still picture.
When this button is pressed again, the tape runs to resume playback.

21. **"STOP" Button**
The "STOP" button is used to stop playback, rewind, and fast forward operations. The "STOP" button has no effect during camera record operation.

22. **"F.FWD" Button**
Press this button during stop or rewind mode, and fast-forwarding starts. "FAST FWD" indication appears in the viewfinder whenever the tape counter or time remaining is present.
Press the button during playback of tape, and the tape is played back in the forward direction approximately 9 times faster than the normal speed to confirm the recorded content.
Press "PLAY" button to return to normal playback mode or press "STOP" button to stop tape movement.
NOTE: You can also visually scan forward when the camera/recorder is record/pause (stand-by) mode by pressing and holding this button.

23. **"PLAY" Button**
Used for playback of tape.
NOTE: When the camera/recorder is record/pause (stand-by) mode, pressing and holding this button will play the tape at normal speed.

24. **"REW" Button**
Press this button during stop or fast forward mode, and fast-rewinding starts. "REWIND" indication appears in the viewfinder whenever the tape counter or time remaining is present. Press the button during playback of tape, and the tape is played back in the rewind direction approximately 7 times faster than the normal speed to confirm the recorded contents.
Press "PLAY" button to return to normal playback mode or press "STOP" button to stop tape movement.
NOTE: You can also visually scan backward when the camera/recorder is record/pause (stand-by) mode by pressing and holding this button.

25. **"REC" Button**
Use this button to record pictures from an external input connected to the "AV IN/OUT" jack. This can be used as a record button only when the "POWER" switch is set to "VCR".

26. **"POWER" Switch**
This turns the camera/recorder on and off and also switches between the camera and VCR modes. Set the switch to "CAM" to turn the camera's power on and to "VCR" to turn the VCR's power. Press and hold the small red button in the switch to switch it.

27. **"EJECT" Switch**
Operates with "POWER" either on or off, if a power source is connected to the camera/recorder.

28. **Record Indicator**
Flashes for about 10 seconds when the "TIME LAPSE/SELF TIMER" button is pressed during record/pause (stand-by) mode and stays on to indicate recording starts.

29. **Microphone**
Sensitive to source coming from the direction in which the camera is pointed.

30. **Focus Ring**
Do not attempt to manually turn the focus ring when the camera/recorder is in the auto focus mode.

31. **Lens**
F1.8 (9 – 54 mm) 6:1 power zoom lens features auto focus and auto iris functions.

32. **Auto Focus Window**
To automatically focus the camera lens, this window transmits and receives infrared light which is reflected off the object. Make sure you don't obstruct this window when recording.

33. **"AV IN/OUT" Jack**
Use the AV output cable (Accessory No. 1) to connect this jack to a TV to view the pictures played back by the camera/recorder.
Use the AV input cable (Accessory No. 11) to connect this jack to a TV or VCR to record pictures from the VCR or TV.

34. **"EARPHONE" Jack**
Sound being recorded by the microphone or played back may be monitored by attaching earphone (Not supplied) to this jack.

35. **"MIC WIND/NORMAL" Switch**
This switch is used to reduce noise that occurs due to wind. **Place the switch in the NORMAL position for normal use.**

36. **Lens Cap Tab**
Place the lens cap on this tab when you are ready to record a scene. The tab also prevents the lens cap from swinging around on its cord.

37. **Cassette Holder**
Slide "EJECT" switch to open the cassette holder. Be aware of the cassette direction when inserting.
NOTE: Power source must be connected to open the cassette holder.

38. **Hand Strap**
Adjust to best fit to your hand.

39. **Power Save Lever**
When the "POWER" switch is set to "CAM", this lever turns the camera's power on and off. This is convenient during camera recording because it is not necessary to set the "POWER" switch to "OFF" when you want to turn camera's power off and then on again.

CHAPTER 2
DISASSEMBLY

Note: Before starting removal, be sure to set the camera/recorder to eject. Otherwise, the right case cannot be removed. Remove the lens hood and set the focus ring to infinity (∞); otherwise, the sensor circuit board and lens block cannot be removed.

1. SEPARATING THE CAMERA SECTION AND VCR SECTION

1-1. ELECTRONIC VIEWFINDER (EVF)

1) Move the EVF in the direction of arrow (A). (See Fig. 2-1)
2) Turn the EVF in the direction of arrow (B).
3) Remove one (1) screw and remove the EVF shoe in the direction of arrow (A).
4) Disconnect connector CN801. (See Fig. 2-2)

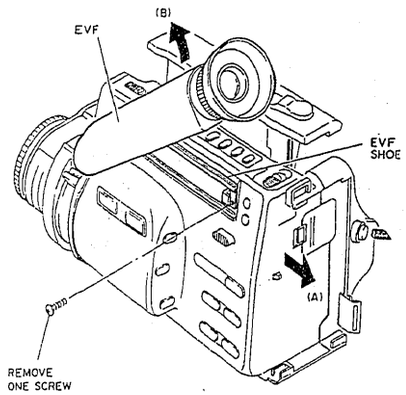

Fig. 2-1

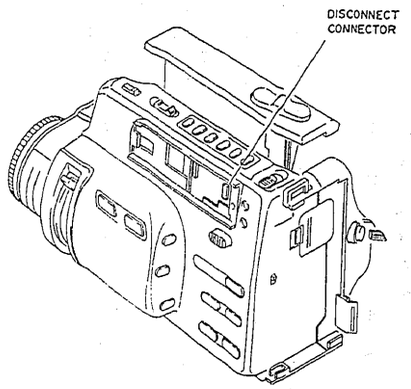

Fig. 2-2

1-2. Cassette Lid, Microphone (MIC)

(1) Cassette Lid

1) Release two (2) tabs and remove the cassette lid in the direction of arrow (A). (See Fig. 2-3)

(2) Microphone (MIC)

1) Remove one (1) screw holding the MIC. (See Fig. 2-3)
2) Remove the MIC in the direction of arrow (B) and disconnect connector CN001 on the jack circuit board.

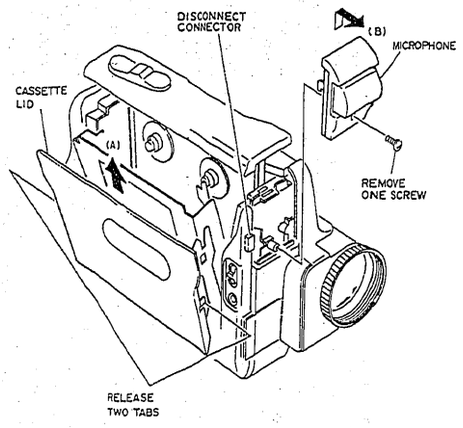

Fig. 2-3

1-3. Separating the Camera Section and VCR Section

ORDER FOR REMOVING PARTS	ITEM No.
· Microphone	1-2

1) Remove six (6) screws holding the camera section and VCR section. (See Fig. 2-4)
2) Disconnect four (4) connectors (CN093, CN903, CN051, CN001) on the DC-DC converter, process circuit board, fuse circuit board. (See Fig. 2-5)

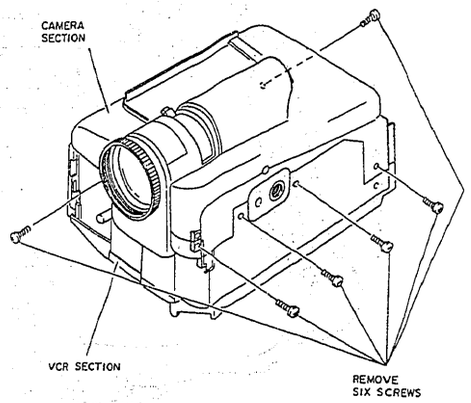

Fig. 2-4

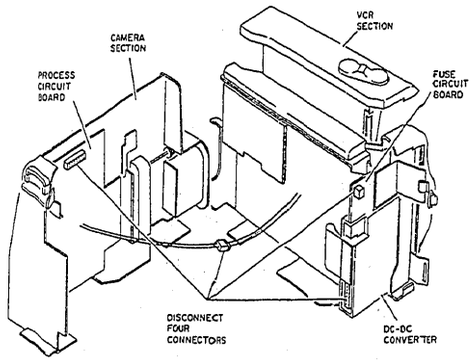

Fig. 2-5

2. CAMERA SECTION (LEFT CASE SIDE) REMOVAL

ORDER FOR REMOVING PARTS	ITEM No.
· EVF	1-1
· Separating the Camera Section and VCR Section	1-3

2-1. Process Circuit Board, Sensor Circuit Board, Lens Block, Control Switch, Left Case

(1) Process Circuit Board

1) Remove one (1) screw holding the tripod mount. (See Fig. 2-6)
2) Disconnect three (3) flat cables (CN1203, CN1204, CN1207) on the process circuit board.
3) Remove two (2) screws holding the process circuit board.
4) Remove one (1) screw holding the process circuit board and control switch holder.
5) Release one (1) tab and remove the process circuit board in the direction of arrow (A) separating from the sensor circuit board. (The process and sensor circuit boards are connected via board-in type connector.)
6) Unsolder one (1) lead wire on the process circuit board (between the process and sensor circuit boards). (See Fig. 2-7)

(2) Sensor Circuit Board, Lens Block

Note: Remove the lens hood first and set the focus ring to infinity (∞) end.

7) Set the zoom lever (zoom ring) to telephoto end position.
8) Remove three (3) screws and remove the lens block from the left case in the direction of arrow (B). (See Fig. 2-6)
9) Remove two (2) screws holding the sensor circuit board.

(3) Control Switch, Left Case

10) Remove four (4) screws and remove the control switch from the left case. (See Fig. 2-6)

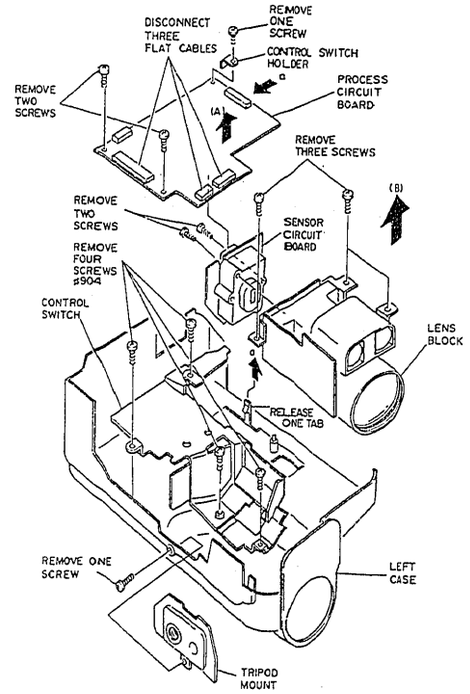

Fig. 2-6

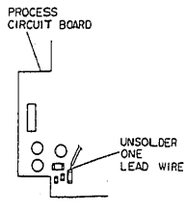

Fig. 2-7

3. VCR SECTION (RIGHT CASE SIDE) REMOVAL

Note: Set the unit to the eject state. Apply DC 3V to pin 1 of PG904 (CN904) on the main circuit board to set the unit to the eject state with the camera section removed (use PG904 pin 2 as ground).

3-1. Right Case, VCR Block

ORDER FOR REMOVING PARTS	ITEM No.
· Cassette Lid	1-2

1) Remove three (3) screws holding the right case. (See Fig. 2-8)
2) Remove the right case in the direction of arrow (B) while pushing the cassette holder in the direction of arrow (A).

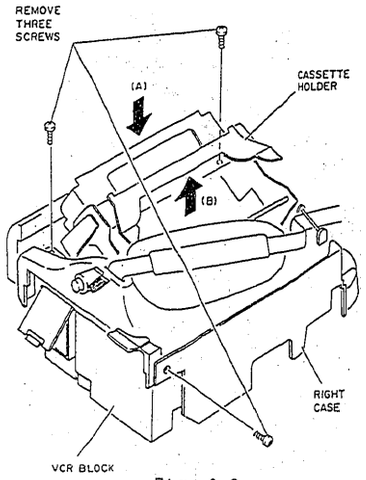

Fig. 2-8

3-2. Main Circuit Board

1) Release one (1) tab and remove the audio IC (IC401) in the direction of arrow (A). (The IC401 and main circuit board are connected via board-in type connector.) (See Fig. 2-9)
2) Disconnect connector CN091 on the DC-DC converter.
3) Disconnect eight (8) flat cables (CN211, CN613, CN902, CN905, CN907, CN908, CN909, CN910) on the main circuit board.
4) Disconnect two (2) connectors (CN212, CN904) on the main circuit board.
5) Release two (2) tabs and open the main circuit board in the direction of arrow (B).
6) Disconnect three (3) flat cables (CN612, CN611, CN905) on the main circuit board. (See Fig. 2-10)

Note: Adjust as follows after installing the main circuit board.
- CHAPTER 4
  3-6. SYSTEM CONTROL CIRCUIT AND SERVO CIRCUIT SECTION

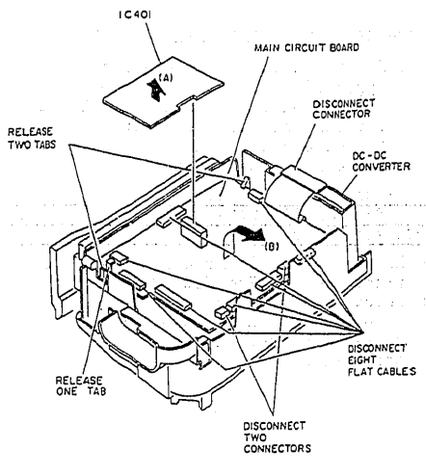

Fig. 2-9

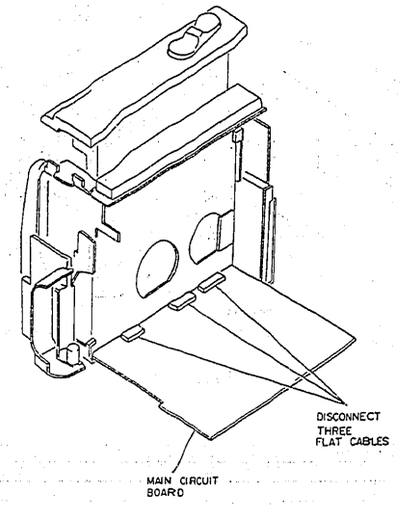

Fig. 2-10

3-3. Function Switch, Jack Circuit Board

ORDER FOR REMOVING PARTS	ITEM No.
· Right Case	3-1

(1) Function Switch

1) Remove the IC401. (See Fig. 2-9)
2) Disconnect one (1) flat cable (CN909) on the main circuit board. (See Fig. 2-11)
3) Remove one (1) screw and remove the function switch in the direction of arrow (A).

(2) Jack Circuit Board

4) Disconnect one (1) flat cable (CN910) on the main circuit board. (See Fig. 2-11)
5) Remove the jack circuit board in the direction of arrow (B).

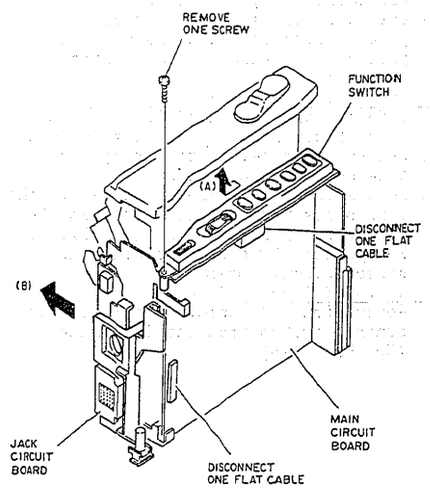

Fig. 2-11

3-4. DC-DC Converter, Fuse Circuit Board, Power Save Switch

ORDER FOR REMOVING PARTS	ITEM No.
· Right Case	3-1

(1) DC-DC Converter

1) Disconnect two (2) connectors (CN091, CN092) on the DC-DC converter. (See Fig. 2-12)
2) Release one (1) tab and remove the DC-DC converter in the direction of arrow (A).

(2) Fuse Circuit Board, Power Save Switch

1) Disconnect connector CN092 on the DC-DC converter. (See Fig. 2-12)
2) Release one (1) tab and remove the fuse circuit board in the direction of arrow (A).
3) Disconnect one (1) flat cable (CN908) on the main circuit board.
4) Release two (2) tabs and remove the power save switch in the direction of arrow (B).

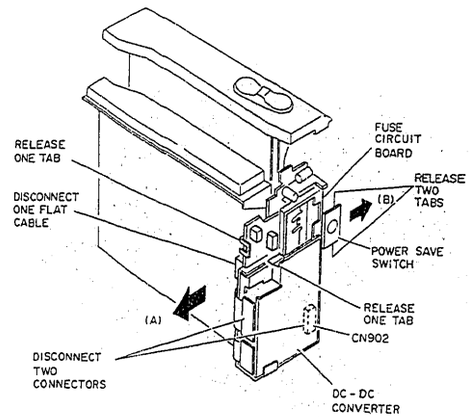

Fig. 2-12

3-5. VCR Frame

ORDER FOR REMOVING PARTS	ITEM No.
· Right Case	3-1
· Main Circuit Board	3-2
· Function Switch, Jack Circuit Board	3-3
· DC-DC Converter, Fuse Circuit Board, Power Save Switch	3-4

1) Remove three (3) screws holding the VCR frame. (See Fig. 2-13)
2) Remove the VCR frame in the direction of the arrow.

3-6. Zoom Switch, Tape Transport Mechanism

ORDER FOR REMOVING PARTS	ITEM No.
· Right Case	3-1

1) Remove the IC401. (See Fig. 2-9)

(1) Zoom Switch

2) Disconnect one (1) flat cable (CN902) on the main circuit board. (See Fig. 2-13)
3) Remove three (3) screws holding the VCR frame.
4) Open the VCR frame with the main circuit board in the direction of the arrow.
5) Release one (1) tab and remove the flat cable holder. (See Fig. 2-14)
6) Release two (2) tabs and remove the zoom switch in the direction of the arrow. (See Fig. 2-15)

(2) Tape Transport Mechanism

7) Disconnect four (4) flat cables (CN612, CN613, CN905, CN907) on the main circuit board. (See Fig. 2-13)
8) Disconnect two (2) connectors (CN212, CN904) on the main circuit board.
9) Disconnect three (3) flat cables (CN211, CN611, CN905) on the main circuit board. (See Fig. 2-14)

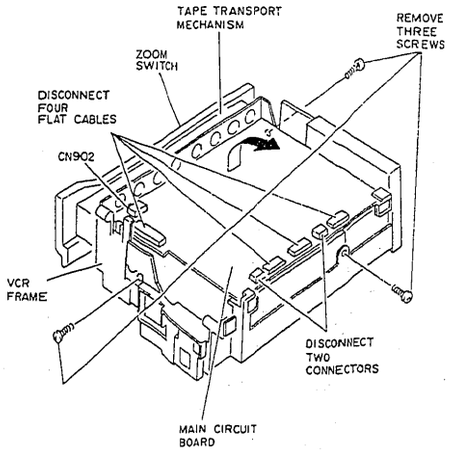

Fig. 2-13

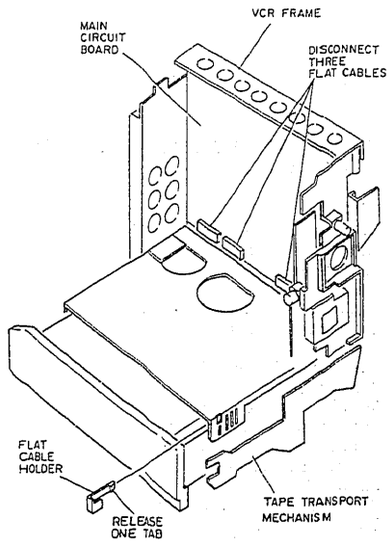

Fig. 2-14

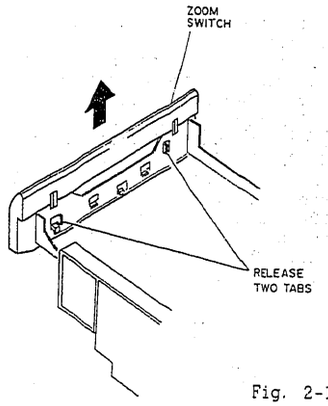

Fig. 2-15

MAIN MECHANICAL COMPONENTS IDENTIFICATION
(SUB CHASSIS)

1. Take-up Guide Roller Rail
2. Take-up Guide Arm
3. Pressure Roller
4. Take-up Guide Roller Base
5. Take-up Reel Disk
6. Safety Tab/Tape Select Switch
7. Take-up Reel Brake
8. Reel Drive Idler
9. Supply Reel Disk
10. Supply Reel Brake
11. Tape Thickness Switch
12. Tension Control Arm
13. Tension Relay Arm
14. Supply Guide Roller Base
15. Tension Arm
16. Supply Guide Roller (3)
17. Supply Guide Roller Rail

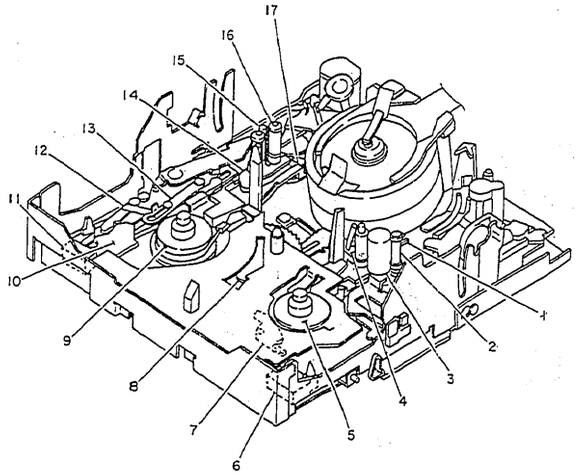

Fig. 2-31

MAIN MECHANICAL COMPONENTS IDENTIFICATION
(MAIN CHASSIS)

1. Cylinder
2. Take-up Guide Post
3. Capstan Motor
4. Center Relay Gear
5. Reel Drive Belt
6. Cassette Holder Drive Arm
7. Take-up Loading Cam Gear
8. Eject Arm
9. Cassette Holder Switch
10. Center Gear
11. Supply Cam Gear Holder
12. Sub Chassis Slide Arm
13. Supply Loading Cam Gear
14. Supply Brake Gear
15. Slide Gear
16. Mechanism State Switch
17. Loading Gear (3)
18. Loading Gear (2)
19. Loading Gear (1)
20. Loading Motor
21. Supply Guide Roller (2)
22. Cylinder Base

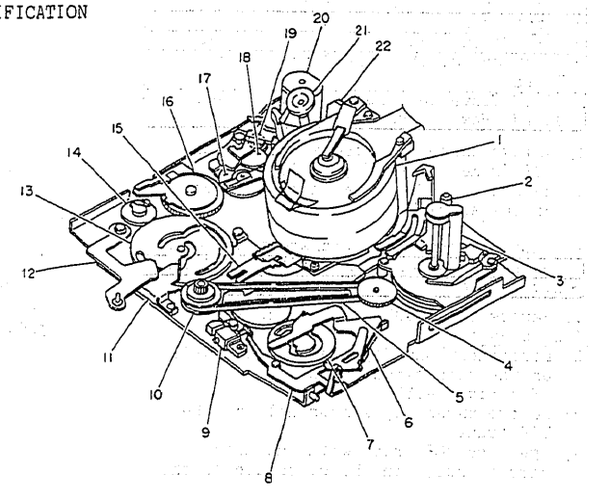

Fig. 2-32

4. SUB CHASSIS ASSEMBLY REMOVAL

ORDER FOR REMOVING PARTS	ITEM No.
· Zoom Switch, Tape Transport Mechanism	3-6

Note: Set the unit to the eject state. Apply DC 3V to pin 1 of CN904 (loading motor) to set the unit to eject state with the tape transport mechanism removed (use CN904 pin 2 as ground).

4-1. Main Chassis Bracket (1), (2)
Note: Lower the cassette holder to lock it when removing main chassis bracket (1)and (2).
1) Remove three (3) screws holding the main chassis bracket (1). (See Fig. 2-33)
2) Remove five (5) screws holding the main chassis bracket (2).

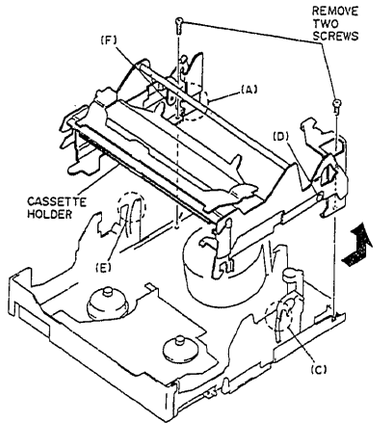

Fig. 2-34

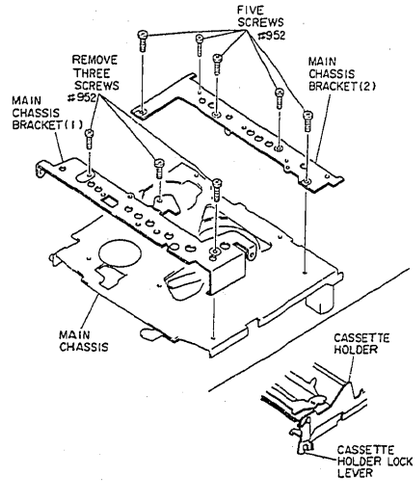

Fig. 2-33

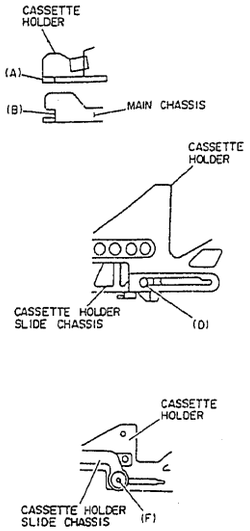

Fig. 2-35

4-2. Cassette Holder
1) Remove two (2) screws and remove the cassette holder in the direction of the arrow. (See Fig. 2-34)
Note: Take care of the following when reinstalling the cassette holder in the main chassis. (See Figs. 2-34, 2-35)
① Section (A) of the cassette holder should be inserted into section (B) (recess) of the main chassis.
② Section (D) of the cassette holder should be inserted into section (C) of the sub chassis. Section (D) is between the cassette holder and cassette holder slide chassis.
③ Section (F) of the cassette holder should be inserted into section (E) of the sub chassis. Section (F) is between the cassette holder and cassette holder slide chassis.

4-3. Sub Chassis Cover

ORDER FOR REMOVING PARTS	ITEM No.
· Cassette Holder	4-2

1) Remove three (3) screws holding the sub chassis cover. (See Fig. 2-36)
2) Release one (1) tab and remove the end LED from the sub chassis cover.

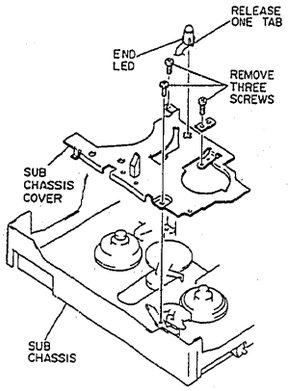

Fig. 2-36

4-4. Reel Drive Idler, Supply Reel Brake, Tension Relay Arm, Tension Control Arm

ORDER FOR REMOVING PARTS	ITEM No.
· Cassette Holder	4-2
· Sub Chassis Cover	4-3

(1) Reel Drive Idler

1) Remove one (1) washer and pull out the reel drive idler from the main chassis. (See Fig. 2-37)

(2) Supply Reel Brake, Tension Relay Arm, Tension Control Arm

1) Remove one (1) washer and pull out the supply reel brake from the sub chassis. (See Fig. 2-37)
2) Remove one (1) washer holding the tension relay arm
3) Remove one (1) washer holding the tension control arm.
4) Pull out the tension relay arm and tension control arm from the sub chassis.

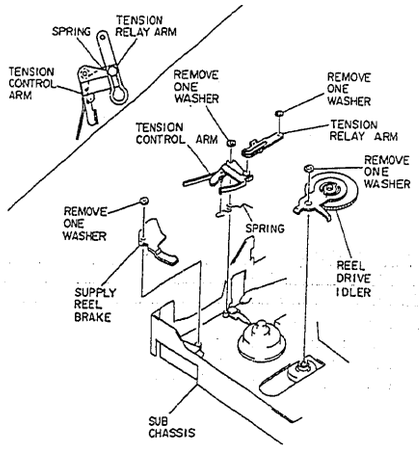

Fig. 2-37

4-5. Pressure Roller, Take-up Guide Arm, Middle Pole

ORDER FOR REMOVING PARTS	ITEM No.
· Cassette Holder	4-2
· Sub Chassis Cover	4-3

1) Release the spring between the pressure roller and sub chassis. (See Fig. 2-38)
2) Move the pressure roller in the direction of the arrow and pull out the pressure roller from the sub chassis.
3) Pull out the take-up guide arm from the sub chassis. (See Fig. 2-39)
4) Remove one (1) washer from the middle pole shaft and pull out the middle pole from the main chassis.

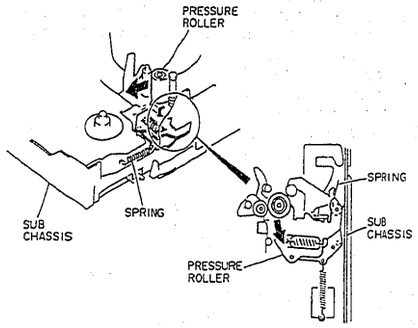

Fig. 2-38

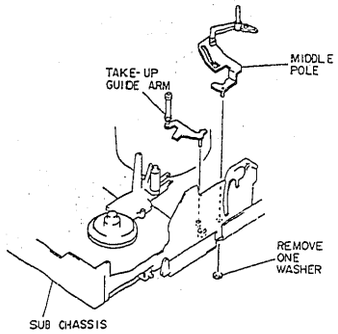

Fig. 2-39

4-6. Sub Chassis Assembly

ORDER FOR REMOVING PARTS	ITEM No.
· Cassette Holder	4-2
· Sub Chassis Cover	4-3
· Reel drive Idler, Supply Reel Brake, Tension Relay Arm, Tension Control Arm	4-4
· Pressure Roller, Take-up Guide Arm, Middle Pole	4-5

1) Remove three (3) screws holding the sub chassis assembly. (See Fig. 2-40)
2) Remove the sub chassis assembly in the direction of the arrow from the main chassis assembly

Note: Adjust as follows after installing the sub chassis assembly.
· CHAPTER 3
3. SUB CHASSIS SLIDE AMOUNT ADJUSTMENT.

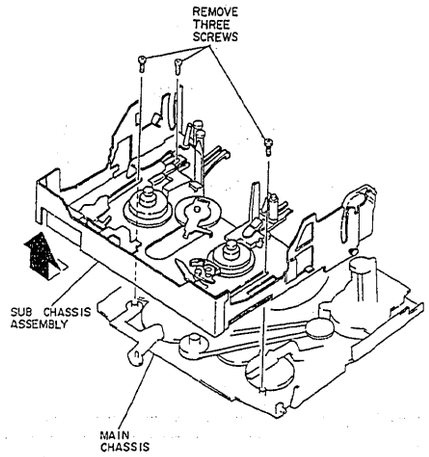

Fig. 2-40

5. MAIN MECHANICAL COMPONENTS ON THE SUB CHASSIS REMOVAL

ORDER FOR REMOVING PARTS	ITEM No.
· Zoom Switch, Tape Transport Mechanism	3-6
· Cassette Holder	4-2

5-1. Cassette Holder Damper

1) Remove one (1) E-ring and remove the cassette holder damper from the sub chassis. (See Fig. 2-41)

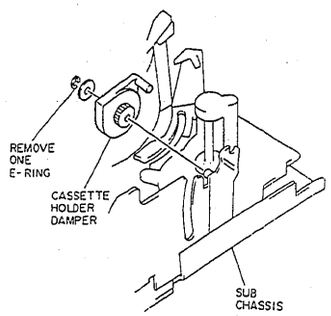

Fig. 2-41

5-2. Sub Chassis Slide Stopper

ORDER FOR REMOVING PARTS	ITEM No.
· Sub Chassis Cover	4-3

1) Remove two (2) screws holding the sub chassis slide stopper. (See Fig. 2-42)

Note: Adjust as follows after installing the sub chassis slide stopper.
· CHAPTER 3
3. SUB CHASSIS SLIDE AMOUNT ADJUSTMENT.

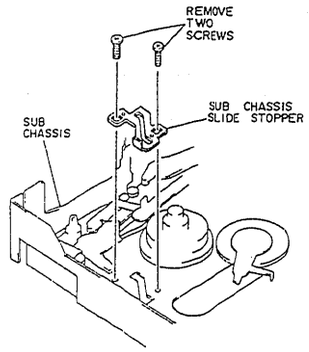

Fig. 2-42

5-3. Tension Arm, Supply Guide Roller (3), Tension Band, Guide Roller Spring

ORDER FOR REMOVING PARTS	ITEM No.
· Sub Chassis Cover	4-3
· Supply Reel Brake, Tension Relay Arm, Tension Control Arm	4-4

1) Remove one (1) screw holding the tension band. (See Fig. 2-43)
2) Release the tension spring between the sub chassis and tension arm.
3) Remove one (1) washer holding the tension arm and supply guide roller (3)
4) Pull out the tension arm, supply guide roller (3) and tension band from the sub chassis.
5) Release (2) tabs and remove the tension band from the tension arm.
6) Remove one (1) washer holding the guide roller spring.

Note: Adjust as follows after installing the tension arm and tension band.
· CHAPTER 3
4-2. TENSION POLE POSITION ADJUSTMENT.
4-3. TENSION ADJUSTMENT.

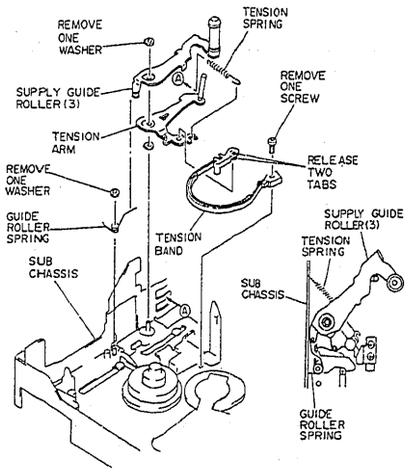

Fig. 2-43

5-4. Take-up Brake Control Arm, Take-up Brake Drive Arm, Take-up Reel Brake, Take-up Reel Disk

ORDER FOR REMOVING PARTS	ITEM No.
· Sub Chassis Cover	4-3

1) Pull out the take-up brake control arm from the sub chassis. (See Fig. 2-44)
2) Release the spring between the take-up brake drive arm and sub chassis.
3) Remove one (1) washer and pull out the take-up brake drive arm from the sub chassis.
4) Remove one (1) washer and pull out the take-up reel brake from the sub chassis.
5) Pull out the take-up reel disk from the sub chassis.

Note: Adjust as follows after installing the take-up reel disk.
· CHAPTER 3
4-1. REEL DISK HEIGHT ADJUSTMENT.

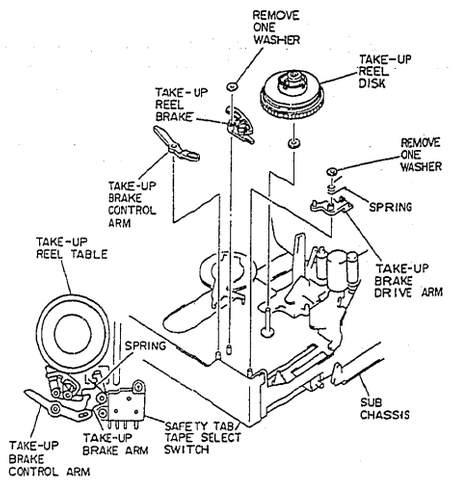

Fig. 2-44

5-5. Take-up Guide Roller Base, Supply Guide Roller Base

ORDER FOR REMOVING PARTS	ITEM No.
· Sub Chassis Cover	4-3
· Reel drive Idler, Supply Reel Brake, Tension Relay Arm, Tension Control Arm	4-4
· Pressure Roller, Take-up Guide Arm, Middle Pole	4-5
· Sub Chassis Assembly	4-6

(1) Take-up Guide Roller Base
1) Turn the take-up loading link gear in the direction of arrow (A) to release the engagement with the sub chassis. (See Fig. 2-45)

(2) Supply Guide Roller Base
1) Turn the supply loading link gear in the direction of arrow (B) to release the engagement with the sub chassis. (See Fig. 2-45)

Note: Adjust as follows after installing the take-up guide roller base or supply guide roller base.
· CHAPTER 3
4-6. SUPPLY GUIDE ROLLER (1)/ TAKE-UP GUIDE ROLLER HEIGHT ADJUSTMENT.

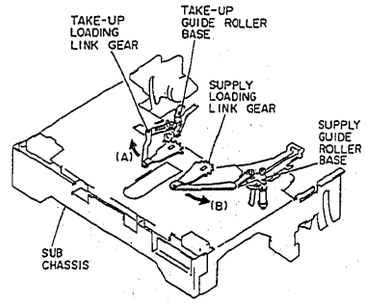

Fig. 2-45

5-6. Take-up Guide Roller Rail, Supply Guide Roller Rail, Supply Reel Disk

ORDER FOR REMOVING PARTS	ITEM No.
· Sub Chassis Cover	4-3
· Reel Drive Idler, Supply Reel Brake, Tension Relay Arm, Tension Control Arm	4-4
· Pressure Roller, Take-up Guide Arm, Middle Pole	4-5
· Sub Chassis Assembly	4-6

(1) Take-up Guide Roller Rail
1) Remove the take-up guide roller base. (See Fig. 2-45)
2) Remove one (1) screw holding the take-up guide roller rail. (See Fig. 2-46)

(2) Supply Guide Roller Rail, Supply Reel Disk
1) Remove the supply guide roller base. (See Fig. 2-45)
2) Remove two (2) screws holding the tension band holder and supply guide roller rail. (See Fig. 2-46)
3) Pull out the supply reel disk from the sub chassis.

Note: Adjust as follows after installing the supply reel disk.
· CHAPTER 3
4-1. REEL DISK HEIGHT ADJUSTMENT.

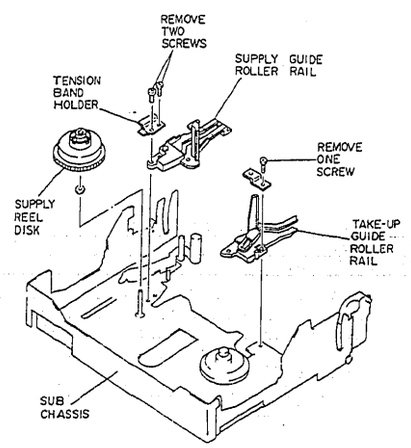

Fig. 2-46

5-7. Trouble Sensor Assembly (Supply End Sensor, Take-up End Sensor, Take-up Reel Sensor, End LED, Safety Tab/ Tape Select Switch, Tape Thickness Switch)

ORDER FOR REMOVING PARTS	ITEM No.
· Sub Chassis Cover	4-3
· Reel drive Idler, Supply Reel Brake, Tension Relay Arm, Tension Control Arm	4-4
· Pressure Roller, Take-up Guide Arm, Middle Pole	4-5
· Sub Chassis Assembly	4-6
· Take-up Guide Roller Base	5-5
· Take-up Guide Roller Rail	5-6

1) Remove one (1) screw holding the safety tab/tape select switch. (See Fig. 2-47)
2) Remove one (1) screw holding the tape thickness switch
3) Remove one (1) screw holding the take-up end sensor. (See Fig. 2-48)
4) Remove one (1) screw holding the Supply end sensor.
5) Peel out the trouble sensor assembly from the sub chassis.

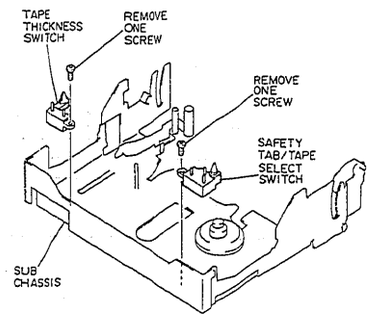

Fig. 2-47

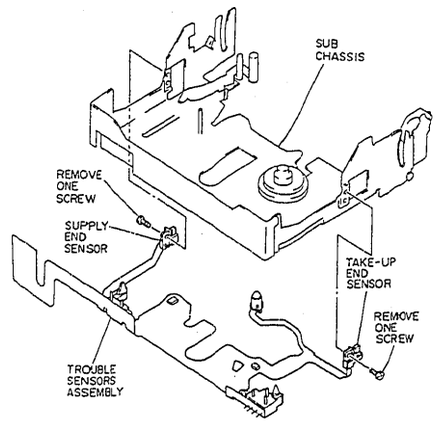

Fig. 2-48

6. MAIN MECHANICAL COMPONENTS ON THE MAIN CHASSIS REMOVAL

ORDER FOR REMOVING PARTS	ITEM No.
· Zoom Switch, Tape Transport Mechanism	3-6
· Cassette Holder	4-2

6-1. Sub Chassis Slide Arm, Supply Brake Gear

ORDER FOR REMOVING PARTS	ITEM No.
· Sub Chassis Cover	4-3
· Reel Drive Idler, Supply Reel Brake, Tension Relay Arm, Tension Control Arm	4-4
· Pressure Roller, Take-up Guide Arm, Middle Pole	4-5
· Sub Chassis Assembly	4-6

(1) Sub Chassis Slide Arm
1) Pull out the sub chassis slide arm and spacer from the main chassis. (See Fig. 2-49)

(2) Supply Brake Gear
1) Pull out the supply brake gear from the main chassis (See Fig. 2-49)

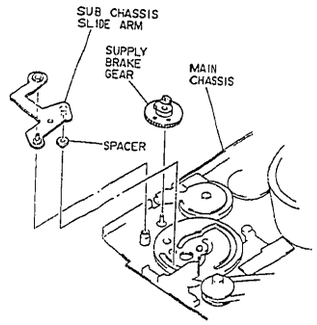

Fig. 2-49

6-2. Cylinder Assembly
1) Remove three (3) screws holding the cylinder assembly. (See Fig. 2-50)

Note: Be careful that your fingers or tools do not touch the video head tips during work.
Attach the cylinder after reinstalling all other components.
Adjust as follows after installing the cylinder assembly.
· CHAPTER 3
5. ADJUSTMENTS AFTER REPLACING CYLINDER.

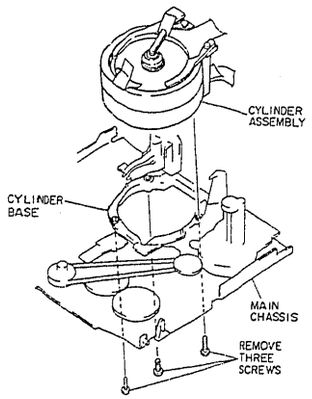

Fig. 2-50

6-3. Capstan Motor, Guide Roller Relay Rail (1)

(1) Capstan Motor

1) Remove three (3) screws and remove the capstan motor from the main chassis. (See Fig. 2-51)

(2) Guide Roller Relay Rail (1)

2) Pull out guide roller relay rail (1) from the main chassis. (See Fig. 2-51)

Note: Adjust as follows after installing the capstan motor.
- CHAPTER 3
  4-5. TKAE-UP GUIDE POLE/TAKE-UP POST HEIGHT ADJUSTMENT.

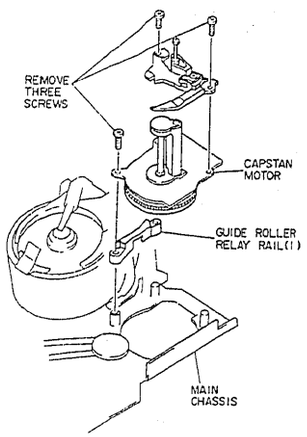

Fig. 2-51

6-4. Supply Guide Roller (2), Supply Tape Guide, Loading Motor

(1) Supply Guide Roller (2), Supply Tape Guide

1) Remove one (1) washer holding the supply guide roller (2). (See Fig. 2-52)
2) Remove two (2) screws holding the supply tape guide.
3) Remove the supply guide roller (2) and supply tape guide from the main chassis.

(2) Loading Motor

4) Remove one (1) screw and remove the loading motor from the main chassis. (See Fig. 2-52)

Note: Adjust as follows after installing the loading motor.
- CHAPTER 3
  4-3. SUPPLY GUIDE ROLLER (2) HEIGHT ADJUSTMENT.

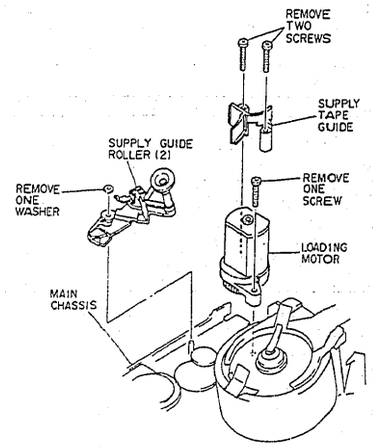

Fig. 2-52

6-5. Loading Gears (1), (2), (3), Mechanism State Switch, Support Plate

Note: Remove the sub chassis assembly from the main chassis as previously given.

ORDER FOR REMOVING PARTS	ITEM No.
· Main Chassis Bracket (1), (2)	4-1
· Supply Guide Roller (2), Supply Tape Guide, Loading Motor	6-4

(1) Loading Gear (2)

1) Remove one (1) washer and pull out loading gear (2) from the main chassis. (See Fig. 2-53)

(2) Loading Gear (1)

2) Remove one (1) washer and pull out loading gear (1) from the main chassis. (See Fig. 2-53)

(3) Loading Gear (3), Mechanism State Switch, Support Plate

2) Remove one (1) screw holding the loading gear holder. (See Fig. 2-53)
3) Pull out loading gear (3) and mechanism state switch from the main chassis.
4) Remove two (2) screw holding the support plate. (See Fig. 2-54)
5) Peel out the flat cable of the mechanism state switch from the main chassis.

Note: Adjust as follows after installing the loading gears (1), (2), (3) and mechanism state switch.
- CHAPTER 3
  2. PHASE MATCHING IN ASSEMBLY.

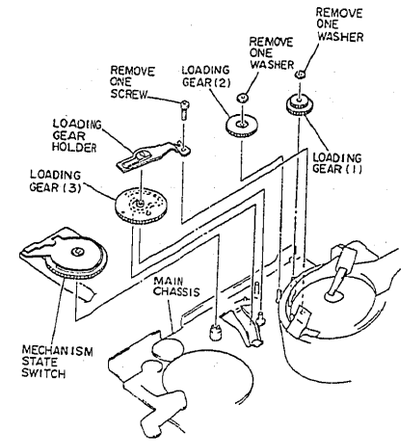

Fig. 2-53

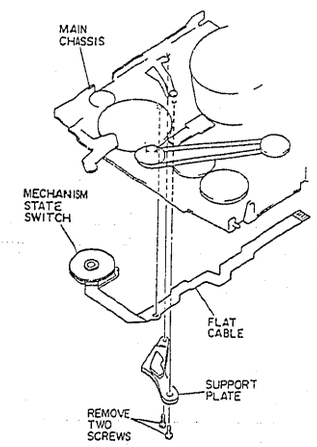

Fig. 2-54

6-6. Supply Loading Cam Gear

Note: Remove the sub chassis assembly from the main chassis as previously given.

ORDER FOR REMOVING PARTS	ITEM No.
· Sub Chassis Slide Arm	6-1

1) Remove two (2) screws holding the supply loading cam gear holder. (See Fig. 2-55)
2) Remove one (1) screw holding the supply loading cam gear from the main chassis.

Note: Adjust as follows after installing the supply loading cam gear.
- CHAPTER 3
  2. PHASE MATCHING IN ASSEMBLY.

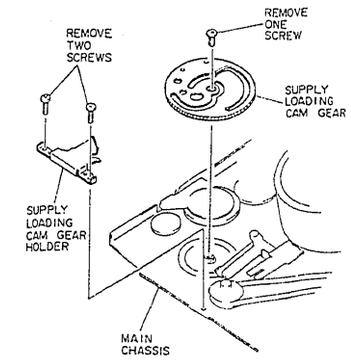

Fig. 2-55

6-7. Center Gear, Center Relay Gear, Reel Drive Belt

Note: Remove the sub chassis assembly from the main chassis as previously given.

ORDER FOR REMOVING PARTS	ITEM No.
· Capstan Motor	6-3

1) Remove the oil seal of the center gear. (See Fig. 2-56)
2) Remove one (1) washer holding the center relay gear.
3) Pull out the center gear and center relay gear with the reel drive belt.

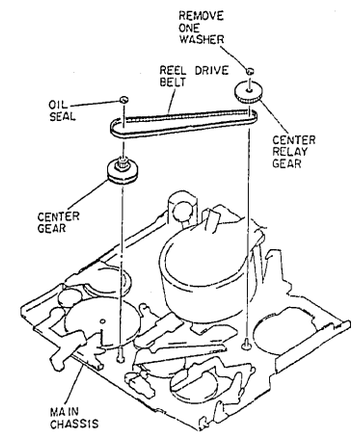

Fig. 2-56

6-8. Pressure Roller Drive Arm, Eject Arm, Take-up Loading Cam Gear

Note: Remove the sub chassis assembly from the main chassis as previously given.

(1) Pressure Roller Drive Arm

1) Remove one (1) screw and remove the pressure roller drive arm from the main chassis. (See Fig. 2-57)

(2) Eject Arm

2) Remove one (1) screw and remove the eject arm from the main chassis. (See Fig. 2-57)

(3) Take-up Loading Cam Gear

2) Remove one (1) screw and remove the take-up loading cam gear from the main chassis. (See Fig. 2-57)

Note: Adjust as follows after installing the take-up loading cam gear.
- CHAPTER 3
  2. PHASE MATCHING IN ASSEMBLY.

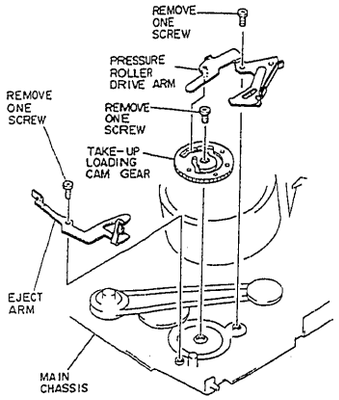

Fig. 2-57

6-9. Cylinder Base, Guide Roller Relay Rail (2), Slide Gear

Note: Remove the sub chassis assembly from the main chassis as previously given.

ORDER FOR REMOVING PARTS	ITEM No.
· Cylinder Assembly	6-2
· Supply Guide Roller (2), Supply Tape Guide, Loading Motor	6-4

Note: Never remove the catcher block from the cylinder base. The catcher blocks and cylinder base are supplied in the assembled state as a service part.

(1) Cylinder Base

1) Remove two (2) screws and remove the cylinder base and slide gear plate from the main chassis. (See Fig. 2-58)

(2) Guide Roller Relay Rail (2)

2) Remove one (1) screw and remove the guide roller relay rail (2) from the main chassis. (See Fig. 2-58)

(3) Slide Gear

2) Remove the slide gear in the direction of the arrow from the main chassis. (See Fig. 2-58)

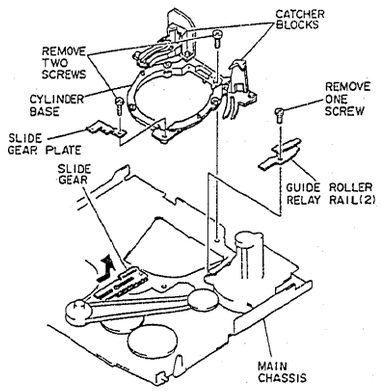

Fig. 2-58

6-10. Reel Drive Belt Cover

Note: Remove the sub chassis assembly from the main chassis as previously given.

ORDER FOR REMOVING PARTS	ITEM No.
· Cylinder Assembly	6-2
· Capstan Motor	6-3
· Center Gear, Center Relay Gear, Reel Drive Belt	6-7
· Cylinder Base, Slide Gear	6-9

1) Remove two (2) screws and remove the reel drive belt cover from the main chassis. (See Fig. 2-59)

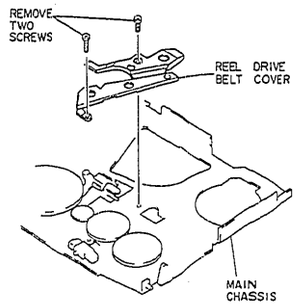

Fig. 2-59

6-11. Cassette Holder Switch/Dew Sensor

Note: Remove the sub chassis assembly from the main chassis as previously given.

ORDER FOR REMOVING PARTS	ITEM No.
· Main Chassis Bracket (1), (2)	4-1
· Cylinder Assembly	6-2
· Supply Guide Roller (2), Supply Tape Guide, Loading Motor	6-4
· Loading Gear (2), (3), Mechanism State Switch, Support Plate	6-5
· Cylinder Base	6-9

1) Remove one (1) screw holding the cassette holder switch. (See Fig. 2-60)
2) Peel out the cassette holder switch/dew sensor from the main chassis. (See Fig. 2-61)

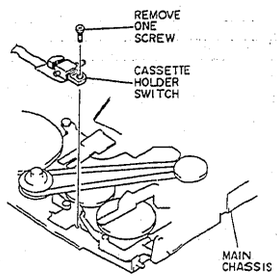

Fig. 2-60

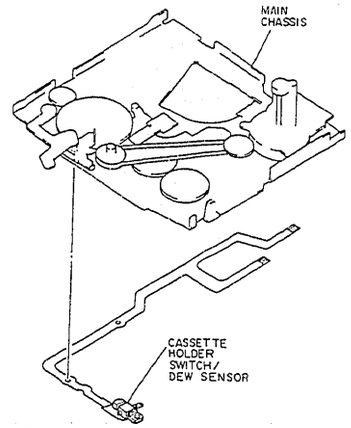

Fig. 2-61

7. LENS BLOCK REMOVAL

ORDER FOR REMOVING PARTS	ITEM No.
· Lens Block	2-1

7-1. Autofocus Circuit Board, Zoom Motor

(1) Autofocus Circuit Board

1) Disconnect four (4) connectors (CN01AF, CN02AF, CN03AF, CN05AF) on the autofocus circuit board. (See Fig. 2-101)
2) Remove one (1) screw and remove the autofocus circuit board from the lens block.
3) Unsolder one (1) connector (CN05AF) on the autofocus circuit board.

(2) Zoom Motor

4) Remove one (1) screw and remove the zoom motor in the direction of the arrow from the lens block. (See Fig. 2-101)

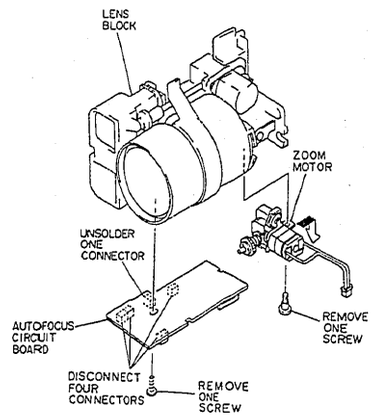

Fig. 2-101

7-2. Focus Motor, Iris Block

(1) Focus Motor

1) Disconnect connector CN01AF on the autofocus circuit board. (See Fig. 2-102)
2) Remove one (1) screw and remove the focus motor in the direction of arrow (A) from the lens block. (See Fig. 2-103)

(2) Iris Block

Note: Move the relay (backfocus) lens backwards when removing the iris block. Take great care that no dust adheres to the iris block and not scratch it.

1) Peel out the iris tape and remove the iris block in the direction of arrow (B).

Note: Do not re use the iris tape once it has been peeled off. Be sure to perform the backfocus adjustment after installing the iris block.

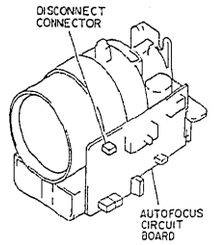

Fig. 2-102

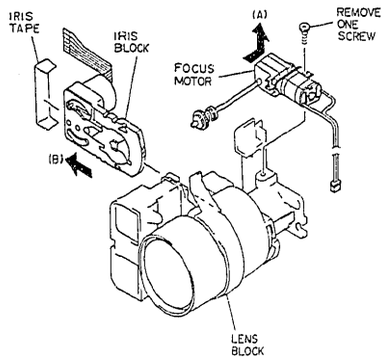

Fig. 2-103

7-3. AF Block

ORDER FOR REMOVING PARTS	ITEM No.
· Focus Motor	7-2

1) Disconnect two (2) connectors (CN02AF, CN03AF) on the autofocus circuit board. (See Fig. 2-104)
2) Unsolder one (1) connector (CN05AF) on the autofocus circuit board.
3) Remove two (2) screws and remove the AF block from the lens block. (See Fig. 2-105)

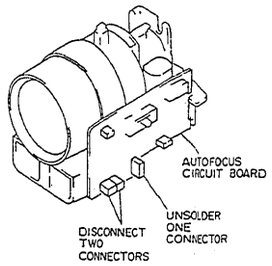

Fig. 2-104

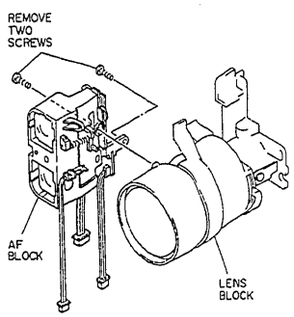

Fig. 2-105

7-4. Index Ring

ORDER FOR REMOVING PARTS	ITEM No.
· Autofocus Circuit Board	7-1

1) Set the zoom ring to the telephoto end and turn the focus ring to the infinity (∞) end. (See Fig. 2-106)
2) Remove one (1) screw holding the index ring.
3) Turn the index ring in the direction of the arrow to release one (1) tab.
4) Release one (1) tab holding the index ring . (See Fig. 2-107)

Note: Be careful not to the zoom ring or focus ring when removing the index ring.

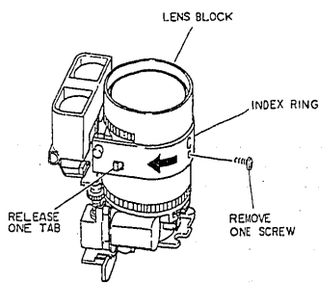

Fig. 2-106

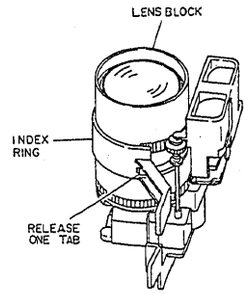

Fig. 2-107

8. ELECTRONIC VIEWFINDER (EVF) REMOVAL

ORDER FOR REMOVING PARTS	ITEM No.
· Electronic Viewfinder (EVF)	1-1

8-1. EVF Shoe
1) Remove the EVF cable holder (1). (See Fig. 2-151)
2) Remove the EVF shoe in the direction of the arrow.

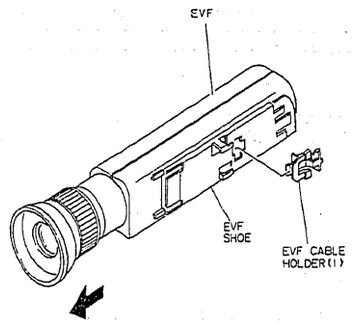

Fig. 2-151

8-2. EVF Lens Block, EVF Right Case
1) Turn the EVF lens block in the direction of arrow (A) and remove the EVF lens block in the direction of arrow (B). (See Fig. 2-152)
2) Turn the EVF shoe holder in the direction of arrow (C) and remove three (3) screws holding the EVF right case.
3) Open the EVF right case and EVF left case.
4) Disconnect one (1) flat cable (CN801) on the indi. circuit board. (See Fig. 2-153)

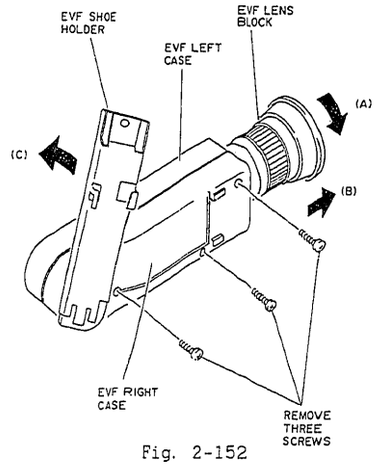

Fig. 2-152

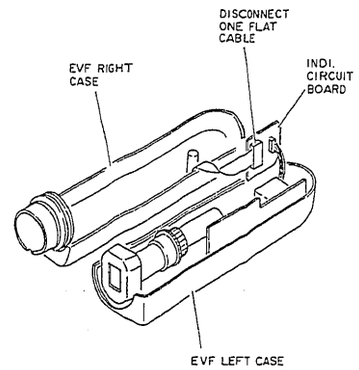

Fig. 2-153

8-3. EVF Left Case, Electronic Viewfinder (EVF) Circuit board, CRT

ORDER FOR REMOVING PARTS	ITEM No.
· EVF Lens Block, EVF Right Case	8-2

(1)EVF Left Case
1) Remove the EVF circuit board and CRT in the direction of the arrow from the EVF left case. (See Fig. 2-154)

(2)EVF Circuit Board, CRT
2) Disconnect connector CN1D on the EVF circuit board. (See Fig. 2-155)
3) Disconnect CRT socket from the CRT.

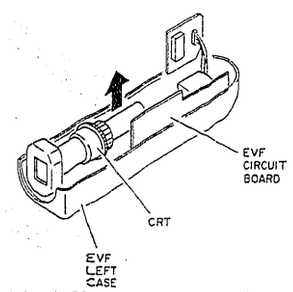

Fig. 2-154

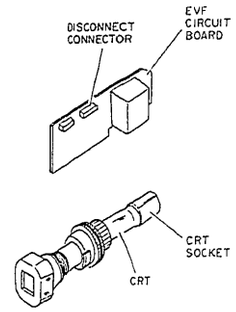

Fig. 2-155

8-4. EVF Cable

ORDER FOR REMOVING PARTS	ITEM No.
· EVF Shoe	8-1
· EVF Lens Block, EVF Right Case	8-2

1) Insert a flat head screwdriver between the EVF right case and EVF cable holder (2) and pry it in the direction of the arrow. Be careful that the EVF cable holder (2) and EVF cable are not damaged at this time. (See Fig. 2-156)
2) Remove the EVF cable from the EVF right case.
3) Release two (2) tabs of EVF cable holder (3) from the exterior of the EVF right case. (See Fig. 2-157)
4) Remove the EVF cable from the EVF cable holder (3) and move it to the exterior of the EVF right case. (See Fig. 2-158)

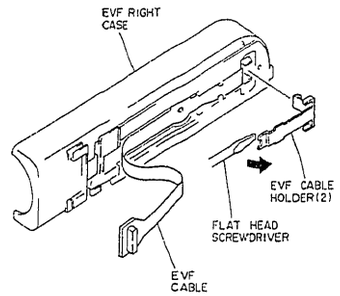

Fig. 2-156

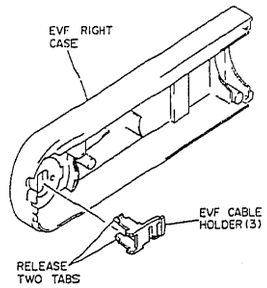

Fig. 2-157

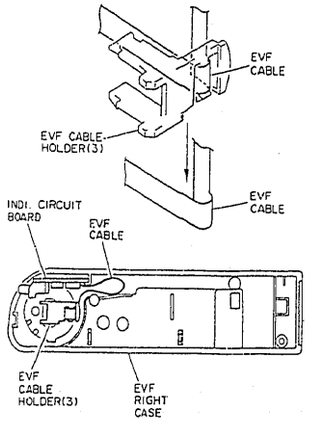

Fig. 2-158

JIG AND TAPES FOR ADJUSTMENT

1. ALIGNMENT TAPE COLOR BAR/400Hz (20HSC-2) No. 7099231 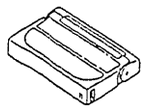	2. CASSETTE TORQUE METER SRK-8T-132: No. 7099235 SRK-8T-112: No. 7099385 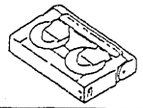	3. MASTER PLANE No. 7099237 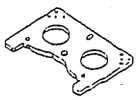	4. REEL DISK HEIGHT JIG No. 7099238 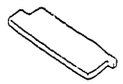
5. SPECIAL DRIVER No. 7099239 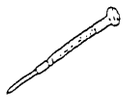	6. 0.7mm HEXAGONAL WRENCH No. 7099316	7. ATF ADJ. JIG No. 7099386 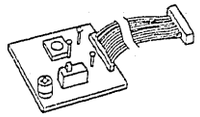	8. BACKFOCUS ADJ. DRIVER No. 7099370
9. LIGHT BALANCING FILTER C12, C2 (46mmφ) C12 : No. 7099369 C2 : No. 7099376	10. STEP-UP RING (37mmφ → 46mmφ) No. 7029086	11. 2-PIN EXTENSION CABLE No. 7099283 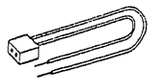	12. 24-PIN EXTENSION CABLE No. 7099387 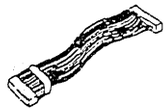
13. 8-PIN EXTENSION CABLE No. 7099388	14. 16-PIN EXTENSION CABLE No. 7099390 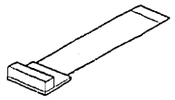	15. 21-PIN EXTENSION CABLE No. 7099397 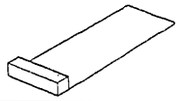	16. 10-PIN EXTENSION CABLE No. 7099391 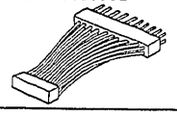

HOW TO USE THE NEW JIGS AND TOOLS

No.	NAME OF JIG & TOOLS	PARTS No.	HOW TO USE (PURPOSE OF USE)
1	ALIGNMENT TAPE	7099231	· Alignment tape for 8mm VCRs. (Video Signal: Color, Audio Signal: 400Hz)
2	CASSETTE TORQUE METER (SRK-8T-132)	7099235	· Cassette Torque meter for 8mm VCRs. · Can measure only the tension torque. (measurement range: 0 ~ 50 g-cm)
	CASSETTE TORQUE METER (SRK-8T-112)	7099385	· Cassette Torque meter for 8mm VCRs. · Can measure only the tension and play torques. (measurement range: 0 ~ 10 g.cm)
3	MASTER PLANE	7099237	· Master plane for 8mm VCRs.
4	REEL DISK HEIGHT JIG	7099238	· Height adjustment jig for 8mm VCRs.
5	SPECIAL DRIVER	7099239	· Screwdriver exclusively used to adjust the height of the guide roller.
7	ATF ADJ. JIG	7099386	· Switches the auto tracking adjustment to manual. · Sets the VCR block to the test mode.
9	C2 LIGHT BALANCING FILTER (46mmφ)	7099376	· Used to adjust the camera block. · When this is combined with a C12 filter to make a C14 filter and attached over the lens, and the camera is pointed at 3100 K light box (chart), the same effect as when the camera is pointed at a 5700 K light box (chart) is obtained.
11	2-PIN EXTENSION CABLE	7099283	· For power supply. (red: positive, brown: negative) · Power supply cable after the case removed.
12	24-PIN EXTENSION CABLE	7099387	· Installed between the main and process circuit boards. · Used when the camera and VCR blocks are separated to adjust, etc.
13	8-PIN EXTENSION CABLE	7099388	· Installed between the DC-DC converter and process circuit board. · Used when the camera and VCR blocks are separated to adjust, etc.
14	16-PIN EXTENSION CABLE	7099390	· Installed between the trouble sensors in the mechanical block and process circuit board. · Used when the main circuit board is removed from the mechanical block to adjust, etc.
15	21-PIN EXTENSION CABLE	7099397	· Installed between the control switch and process circuit board. · Used to check control switch operations after removing the camera block from the left case.
16	10-PIN EXTENSION CABLE	7099391	· Used to adjust the camera block. · Insert the plug with the smaller pin intervals into the test connector on the process circuit board to use is as a test point (TP1201 in camera block adjustments).

MEMO

CHAPTER 3
MECHANISM ADJUSTMENT

1. BEFORE STARTING ADJUSTMENT

- Remove the components shown in the table below beforehand, referring to the CHAPTER 2 DISASSEMBLY.

ORDER FOR REMOVING PARTS	*ITEM No.*
· Electronic Viewfinder (EVF)	1-1
· Cassette Lid, Microphone	1-2
· Separating the Camera section and VCR Section	1-3
· Right Case, VCR Block	3-1

- The mechanism adjustment can only be done in the VCR block. Supply power by the following procedure when adjusting the transport system.
  1) Set the POWER switch "VCR" position.
  2) Connect the ATF jig to CN614 on the main circuit board.
  3) Supply power while depressing the F.FWD (fast forward) button on the function switch.
  4) Press the STOP button on the function switch.

Note: Set SW1 on the ATF jig to "OFF" position. Do the work with the ATF jig attached.

- To set the unit to the play mode without loading a cassette, shut off the light from the END LED on the sub chassis completely and press the PLAY button on the function switch.

2. PHASE MATCHING IN ASSEMBLY (Figs. 3-1, 3-2, 3-3)

Be sure to match the phases when reinstalling the loading motor, mechanism state switch, loading gear (1), (2) and (3), supply brake gear, supply loading cam gear and take-up loading cam gear.

Note: Set the 8mm camera/recorder to the eject state for phase matching in assembly. Do not reuse the washers which were removed.

REINSTALLING PROCEDURE:

1) Align marks (A) and (A') on the mechanism state switch and marks (B) and (B') on the rotor. (See Fig. 3-1)
2) Reinstall the components into the main chassis in the condition after step 1). Align mark (C) and the loading gear (3) and mark (A) on the mechanism state switch at this time. (See Fig. 3-2)
3) Reinstall the supply loading cam gear into the main chassis so that mark (E) on the supply brake gear and mark (F) on the supply loading cam gear are aligned. (See Fig. 3-2)
   Check that mark (A') on the mechanism state switch and mark (D) on the supply loading cam gear are aligned.
4) Reinstall the take-up loading cam gear so that hole (G) in the gear is aligned with the hole in the main chassis. (See Fig. 3-3)

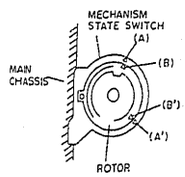

Fig. 3-1

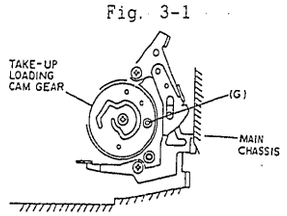

Fig. 3-3

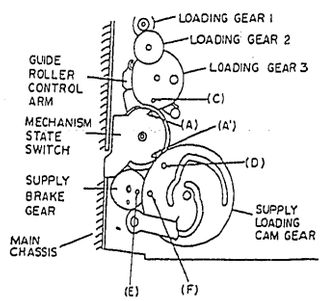

Fig. 3-2

3. SUB CHASSIS SLIDE AMOUNT ADJUSTMENT (Figs. 3-4, 3-5, 3-6, 3-7)

Be sure to perform this adjustment when attaching the sub chassis to the main chassis.

PURPOSE : To set the amount by which the sub chassis slides.		*FAULT DUE TO INCOMPLETE ADJUSTMENT:* Tape is not loaded normally.	
TEST EQUIPMENT/JIG	*STATE OF VCR*	*TEST POINT*	*ADJUSTMENT POINT*
	Shut off the light to the END LED to set the unit to the play mode without loading a cassette.		Sub chassis slide stopper.

ADJUSTMENT PROCEDURE:

1) Loosen two (2) screws holding the sub chassis slide stopper. (See Fig. 3-4)
2) Push in the sub chassis in the direction of the cylinder. (See Fig. 3-5)
   Push in both ends of the sub chassis simultaneously with even force.
3) Set the sub chassis slide stopper to the following position.
   ① When viewed from the top of the cylinder, the right screw holding the sub chassis slide stopper should be aligned with the top of the hole in the stopper.
   ② The left screw holding the sub chassis slider stopper should be set to the center of the hole in the stopper.
4) Tighten two (2) screws holding the sub chassis slide stopper in the condition after step 3).

Note: After adjustment is completed, check the following.
   ① Check that the gap between the take-up guide roller rail and guide roller relay rail (1) is within 0.3mm. (Use the 0.25mm washer used in the mechanical block to make checking easier.) (See Fig. 3-6)
   ② Press the eject button to set the unit to eject and check that the distance between the screw (holding the sub chassis) on the shaft of the mechanism state switch and the end of the sub chassis is within 1.5mm. (See Fig. 3-7)

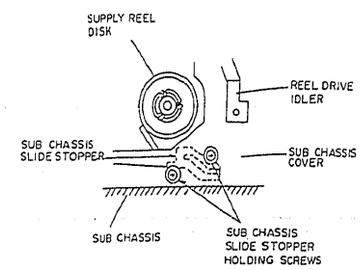

Fig. 3-4

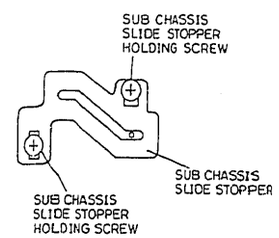

Fig. 3-5

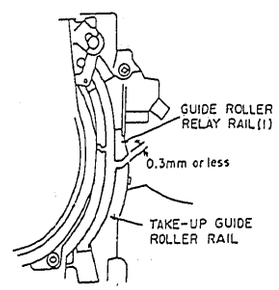

Fig. 3-6

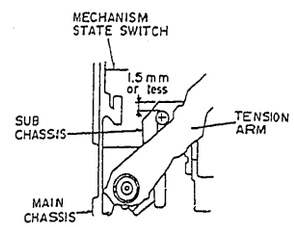

Fig. 3-7

4. TAPE TRANSPORT SYSTEM CHECK/ADJUSTMENT

The tape transport system is the path from the supply reel disk to the take-up reel disk via the cylinder. The tape transport components, especially the components which come into direct contact with the tape, should be kept clean without damage, dust and oil, etc. adhering to the contact surfaces.
The tape transport system is adjusted before shipment from the factory, so perform adjustments only when the transport are replaced or transport system adjustments have drifted. Do not reuse washers which have been removed.

4-1. REEL DISK HEIGHT ADJUSTMENT (Fig. 3-8)

Be sure to perform this adjustment after reinstalling the supply or take-up reel disk.

PURPOSE : To set the reel disk height to the specified value.		*FAULT DUE TO INCOMPLETE ADJUSTMENT:* Tape is not loaded normally.	
TEST EQUIPMENT/JIG	*STATE OF VCR*	*TEST POINT*	*ADJUSTMENT POINT*
· Master Plane · Reel Disk Height Jig	· Shut off the light from the END LED. · Mount the master plane, set the unit to the play mode and then the stop mode.		

ADJUSTMENT PROCEDURE:

Note: Use the same procedure for the supply and take-up sides.

1) Fit the reel disk height jig to the reel disk as shown in Fig. 3-8.
2) Adjust the washer (thickness: 0.25mm) at the bottom of the reel disk so that (C) of the reel disk is between (A) and (B) of the reel disk height jig.

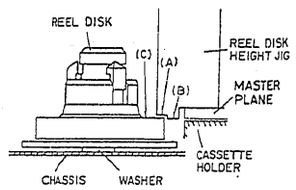

Fig. 3-8

4-2. TENSION POLE POSITION ADJUSTMENT (Fig. 3-9)

Be sure to perform this adjustment after reinstalling the tension arm, tension band and supply.

PURPOSE : To set the tape tension to the specified value.		*FAULT DUE TO INCOMPLETE ADJUSTMENT:* Tape is not loaded normally.	
TEST EQUIPMENT/JIG	*STATE OF VCR*	*TEST POINT*	*ADJUSTMENT POINT*
	Shut off the light from the end LED and set the play mode without loading a cassette.		

ADJUSTMENT PROCEDURE:

1) Set the tension spring to position (C) on the tension spring holder.
2) After loading is completed, loosen screw (A) holding the tension band holder.
3) Adjust the position of the tension band holder so the left of the hole in supply guide roller (3) is aligned with the inner flange of the tension arm.
4) After adjustment is completed, tighten screw (E).

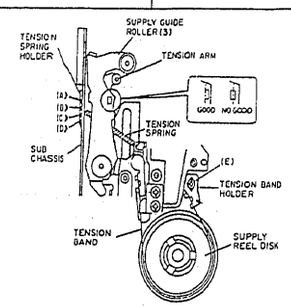

Fig. 3-9

4-3. TENSION ADJUSTMENT (Fig. 3-9)

Be sure to perform this adjustment after reinstalling the tension band and supply reel disk.

PURPOSE : To set the tape tension to the specified value.		*FAULT DUE TO INCOMPLETE ADJUSTMENT:* Tape is not loaded normally.	
TEST EQUIPMENT/JIG	*STATE OF VCR*	*TEST POINT*	*ADJUSTMENT POINT*
· Cassette Torque Meter (SRK-8T-112)			

ADJUSTMENT PROCEDURE:

1) Set the tension spring to section (C) of the tension spring holder. (See Fig. 3-9)
2) Load the cassette torque meter and set the unit to the play mode.
3) Adjust the position of the tension spring so the tension on the supply side is 3.5 ~ 4.5 g-cm.
   ① If the tension is higher than 4.5 g-cm, hook the tension spring to section (B) or (A) of the tension spring holder.
   ② If the tension is lower than 3.5 g-cm, hook the tension spring holder.

Note: If the tension is changed greatly (2 g-cm or more) in this adjustment, readjust the tension pole position and tension. (If the above specifications are not satisfied, the tension band or tension spring is faulty.)

4-4. SUPPLY GUIDE ROLLER (2) HEIGHT ADJUSTMENT (Figs. 3-10, 3-11, 3-12)

Be sure to ckeck and adjust the height of supply guide roller (2) after reinstalling it.

Note: The supply guide roller (2) is specified as a service part while it is assembled with the guide roller base. Since it is coarsely adjusted before the unit is shipped from the factory, do not adjust its height unnecessarily.

PURPOSE : To set height relative to the cylinder.		*FAULT DUE TO INCOMPLETE ADJUSTMENT:* The play back picture distorted.	
TEST EQUIPMENT/JIG	*STATE OF VCR*	*TEST POINT*	*ADJUSTMENT POINT*
· Blank Tape · Alignment Tape · Oscilloscope · ATF Jig	Connect the ATF jig to CN614 on the main circuit board. (SW1:OFF)	TP1 (SW30) ATF TP2 (GND) ATF TP3 (FM OUT) ATF CN614 MAIN	

ADJUSTMENT PROCEDURE:

1) Load a blank tape and set the unit to the play mode.
2) Check that no curling or creasing of tape occurs around supply guide roller (2). If curling or cresing occurs, turn the top of supply guide roller (2) using a flat-bladed screwdriver, etc. to fine adjust its height. (Fig. 3-12)
3) Connect an oscilloscope to TP3 on the ATF jig. (Fig. 3-10)
4) Trigger the oscilloscope with TP1 (SW30) on the ATF jig.
5) Load the alignment tape while was fully rewound and set the unit to the forward search mode.
6) Turn the top of supply guide roller (2) using a flat-bladed screwdriver, etc. to lower it until the rhombic FM waveform is not flat. (Fig. 3-11)
7) Turn the top of supply guide roller (2) in the opposite direction to that in step 6) so the rohmbic FM waveform is flat.

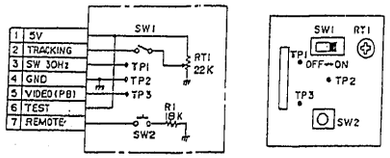

Fig. 3-10

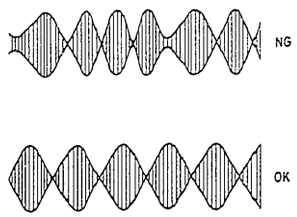

Fig. 3-11

4-5. TAKE-UP GUIDE POLE/TAKE-UP GUIDE POST HEIGHT ADJUSTMENT (Figs. 3-12, 3-13)

Besure to perform this adjustment after reinstalling the take-up guide pole and capstan motor.

Note: The take-up guide post is specified as a service part while it is assembly with the capstan motor. Since it is coarsely adjusted before the unit is shipped from the factory, do not adjust its height unnecessarily.

PURPOSE : To set height relative to the cylinder.		*FAULT DUE TO INCOMPLETE ADJUSTMENT*: The play back picture distorted.	
TEST EQUIPMENT/JIG	*STATE OF VCR*	*TEST POINT*	*ADJUSTMENT POINT*
· Blank Tape			

ADJUSTMENT PROCEDURE:

1) Load a Blank tape and set the unit to the play mode.
2) Adjust screw (A) on the capstan motor so the tape travels at the center of the middle pole. Check that no curling or creasing occurs around the take-up guide post. If curling or creasing occurs, turn the top of the take-up guide post using a special diver to fine adjust its height. (Figs. 3-12, 3-13)
3) Turn the top of the take-up guide pole using a special driver to adjust its height so the tape travels at the center of the take-up guide pole.
4) Repeat reverse search and play and turn screw (B) on the capstan motor to adjust the inclination of the capstan motor so the variations in the height of tape are within the upper and lower flanges of the take-up guide pole.
5) Adjust screw (A) on the capstan motor so the tape travels at the center of the middle pole during play. Be careful that the tension of tape between the take-up guide roller and middle pole is not too high (the tape should be slightly slack).
6) Turn the top of the take-up guide pole using a special driver to adjust its height so the tape travels at the center of the take-up guide pole during play.
7) Load a blank tape which was fully rewound and set the unit to the play mode. Turn the top of the take-up guide post using a special driver to lower it so that curling occurs at the lower flange of the take-up guide post.
8) Turn the top of the take-up guide post in the opposite direction to that in step 7) so that no curling occurs.

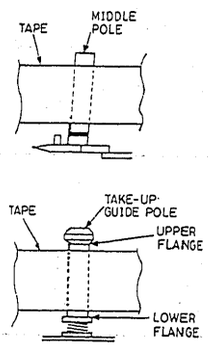

Fig. 3-12

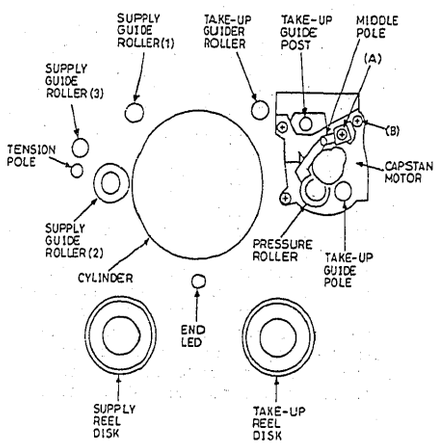

Fig. 3-13

4-6. SUPPLY GUIDE ROLLER (1)/TAKE-UP GUIDE ROLLER HEIGHT ADJUSTMENT (Figs. 3-10, 3-12, 3-14)

Be sure to perform this adjustment after reinstalling the supply guide roller (1) and take-up guide roller.

Note: The supply guide roller (1) and take-up guide roller are specified as service parts while they are assembled with their guide roller bases. Since they are coarsely adjusted before the unit is shipped from the factory, do not adjust their heights unnecessarily.

PURPOSE : To set height relative to the cylinder.		*FAULT DUE TO INCOMPLETE ADJUSTMENT*: The play back picture distorted.	
TEST EQUIPMENT/JIG	*STATE OF VCR*	*TEST POINT*	*ADJUSTMENT POINT*
· Blank Tape · Alignment Tape · Oscilloscope · ATF Jig	Connect the ATF jig to CN614 on the main circuit board. (SW1: off, RT1: its mechanical center.)	· TP1 (SW30) ATF · TP2 (GND) ATF · TP3 (FM OUT) ATF · CN614 MAIN	

ADJUSTMENT PROCEDURE:

1) Load a blank tape and set the unit to the play mode.
2) Check that no curling or creasing of tape occurs around supply guide roller (1) and the take-up guide roller. If curling or creasing occurs, turn the tops of supply guide roller (1) and the take-up guide roller using a special driver to fine adjust their heights. (Fig. 3-12)
3) Connect an oscilloscope to TP3 on the ATF jig. (Fig. 3-10)
4) Trigger the oscilloscope with TP1 (SW30) on the ATF jig.
5) Load the alignment tape which was fully rewound and set the unit to the play mode.
6) Check that the FM output waveform at TP3 is flat. Set SW1 on the ATF jig to ON and turn RT1 to the left and right to check that the FM output level drops at an equal angle on the left and right. (Fig. 3-14)
7) If the specification in step 8) cannot be confirmed, turn the tops of supply guide roller (1) and the take-up guide roller using a special driver to adjust their heights so the specification in step 7) can be satisfied.

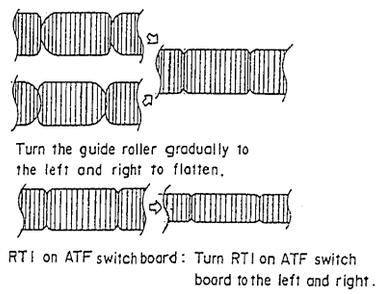

Fig. 3-14

5. ADJUSTMENT AFTER REPLACING THE CYLINDER (Figs. 3-10, 3-15)

When the cylinder is replaced, the height relative to the guide roller drifts, therefore the tape transport system should be adjusted.
Check and adjust in the following order.

PURPOSE : To set the relative height of the guide rollers.		*FAULT DUE TO INCOMPLETE ADJUSTMENT*: The played back picture is distorted.	
TEST EQUIPMENT/JIG	*STATE OF VCR*	*TEST POINT*	*ADJUSTMENT POINT*
· Blank Tape · Alignment Tape · Oscilloscope · ATF Jig	Connect the ATF jig to CN614 on the main circuit board. (SW1: off, RT1: its mechanical center.)	· TP1 (SW30) ATF · TP2 (GND) ATF · TP3 (FM OUT) ATF · CN614 Main	

ADJUSTMENT PROCEDURE:

1) Load a blank tape and set the unit to the play mode.
2) Check that no curling or creasing of the tape occurs around the guide rollers. If curling or creasing of the tape occurs, fine adjust the height of the guide rollers by the following procedure.
3) Load an alignment tape and set the unit to the play mode.
4) Connect an oscilloscope to TP3 on the ATF jig.
5) Trigger the oscilloscope with TP1 (SW30) on the ATF jig.
6) Adjust voltage level control on the oscilloscope to set the maximum amplitude of the FM output to 4 graduations. (Fig. 3-15)
   Check that the FM output is flat at this time. Set SW1 on the ATF jig to ON and adjust RT1 to set the maximum amplitude of the FM output to 3 graduations. Check that the minimum amplitude is set to 1.8 graduations or more.
7) If the specifications in step 6) cannot be confirmed, adjust the heights of the supply and take-up guide rollers so the specifications are satisfied.
8) Perform the following electrical adjustments referring to CHAPTER 4.
   - Setting the Head Switching Point
   - Playback Luminance Signal Level Adjustment
   - Record Luminance Signal Level Adjustment
   - Record Chroma Signal Level Adjustment

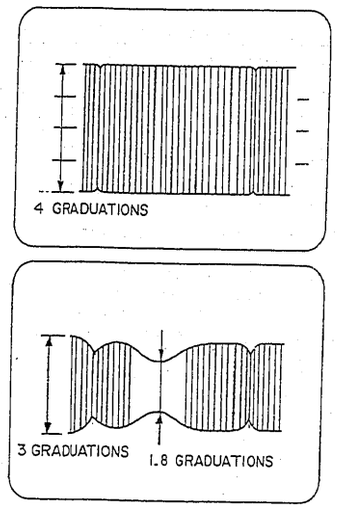

Fig. 3-15

6. CHECKING THE TORQUE

There are two (2) types of the cassette torque meter. Choose the one applicable for measurement to be performed.

- SRK-8T-112: Cannot measure only the tension torque.
- SRK-8T-132: Can measure only the tension and play torques.

I T E M	*VCR MODE*	*MEASURED REEL DISK*	*TORQUE VALUE*	*TORQUE CASSETTE USED*
Take-up Torque	Play	Take-up	7 ~ 11 g-cm	SRK-8T-112
Rewind Torque	Reverse search to stop	Supply	20 ~ 34 g-cm	SRK-8T-132
Take-up Brake Torque	Forward search to stop	Take-up	7 ~ 11 g-cm	SRK-8T-112

MEMO

CHAPTER 4
ELECTRICAL ADJUSTMENT

1. CONNECTION FOR ADJUSTMENT

Remove the components, etc. listed below first, referring to CHAPTER 2 DISASSEMBLY. (See Fig. 4-1)

ORDER FOR REMOVING PARTS	*ITEM No.*
· Electronic Viewfinder (EVF)	1-1
· Cassette Lid, Microphone	1-2
· Separating the Camera Section and VCR Section	1-3
· Process Circuit Board, Sensor Sensor Circuit Board, Lens Block	2-1

Note 1: When the EVF is removed, no operation mode will be displayed on the monitor screen.

Note 2: Remove the above components from the left case and reassemble them so that the adjustments can be performed.

Note 3: Adjustments other than "subcarrier frequency confirmation", "sensor driver pulse frequency adjustment" and "backfocus adjustment" can be done without removing the left case.

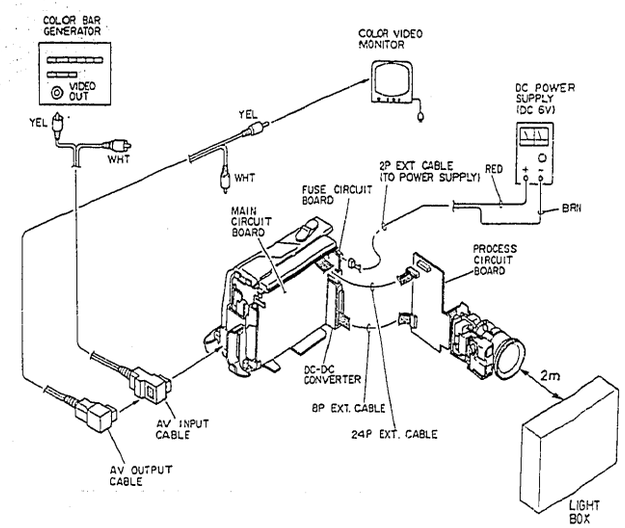

Fig. 4-1

2. CAMERA SECTION ADJUSTMENT

2-1. CIRCUIT BOARD LOCATIONS

1. Process Circuit Board
2. Sensor Circuit Board
3. Autofocus Circuit Board

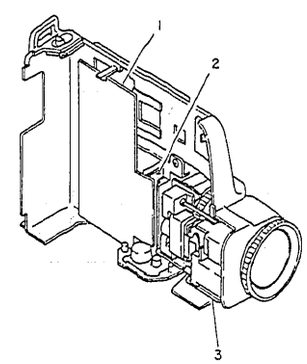

Fig. 4-2

2-2. TEST EQUIPMENT AND CHARTS NECESSARY FOR ADJUSTMENT

- Test Equipment
  - Oscilloscope (dual trace)
  - (Vectorscope)
  - (Waveform Monitor)
  - Digital Voltmeter (DVM)
  - Frequency Counter
  - Color Video Monitor
- Charts, etc.
  - Gray Scale Chart
  - Color Bar Chart
  - Resolution Chart
  - Backfocus Adjustment Chart
  - Light Box (3100°K)
  - Light Balancing Filter (C14 = C12 + C2)
  - Step-up Ring (37mmφ → 46mmφ)
  - DC Power Supply (DC 6V)
  - DC Power Supply (DC 0 ~ 5V)
  - Backfocus Adjustment Driver

2-3. ADJUSTMENT CONDITION

1) Check that the VCR section has been adjusted correctly before adjusting the camera section
2) Connect this unit, a power supply and a color video monitor as shown in Fig. 4-1.

3) Place the chart (light box) 2m away from the camera (lens surface) when otherwise not specified.
4) Point the camera at the chart to fill the video period when otherwise not specified.
5) Use the 10:1 probe of the oscilloscope when other not specified.
6) When "Trigger the oscilloscope internally" is specified, set the time base of the oscilloscope to 10μs/div.
7) When using the VIDEO OUT (AV OUT) to perform adjustment, be sure to terminate the AV OUT jack with 75 ohm.

2-4. PRESET POSITION OF SWITCHES AND CONTROLS DURING ADJUSTMENT

- POWER switch ..... "CAM" position
- POWER SAVE/NORMAL switch ..... "NORMAL" position
- FOCUS switch ..... "MANUAL" position
- SHUTTER SPEED ..... "1/60"
- TITLE ..... "OFF"

2-5. LIST OF CHARTS FOR CAMERA ADJUSTMENT

Table 4-1

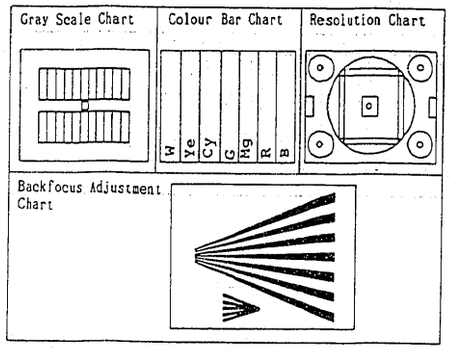

2-6. ADJUSTMENTS AFTER REPLACING MAJOR COMPONENTS IN THE CAMERA BLOCK

After replacing major components, perform adjustments, referring to the table below. The following table shows the minimum adjustments required after major components are replaced.
The table below may not apply when several components are replaced, depending on the symptom of the defect.

ITEM	NAME OF ADJUSTMENT	NAME OF MAJOR COMPONENTS					
		Sensor C.B.A	IC1001	Process C.B.A	IC1202	IC1203	IC1204
(1)	Sub Carrier Frequency Confirmation			●			
(2)	Sensor Drive Pulse Lock Voltage Adjustment			●	●		
(3)	Backfocus Adjustment	●	●				
(4)	Sensor Sub Voltage Adjustment	●	●	●			
(5)	Luminance Setup level Adjustment	●	●	●		●	●
(6)	AIC level Adjustment	●	●	●		●	
(7)	Matrix Adjustment	●	●	●	●	●	●
(8)	White Balance Hold Voltage Setting	●	●	●	●	●	●
(9)	R-Y/B-Y Setup Adjustment	●	●	●	●	●	●
(10)	White Balance Adjustment	●	●	●	●	●	●
(11)	Chroma Level Adjustment	●	●	●	●	●	●
(12)	Program AE Adjustment			●			

ITEM	NAME OF ADJUSTMENT	NAME OF MAJOR COMPONENTS					
		IC1205	IC1206	IC1207	IC1208	IC1210 IC1214	IC1211
(1)	Sub Carrier Frequency Confirmation						●
(2)	Sensor Drive Pulse Lock Voltage Adjustment						
(3)	Backfocus Adjustment						
(4)	Sensor Sub Voltage Adjustment						
(5)	Luminance Setup level Adjustment		●			●	●
(6)	AIC level Adjustment		●	●		●	●
(7)	Matrix Adjustment	●					
(8)	White Balance Hold Voltage Setting	●	●			●	●
(9)	R-Y/B-Y Setup Adjustment	●	●			●	●
(10)	White Balance Adjustment	●	●			●	●
(11)	Chroma Level Adjustment	●	●	●		●	●
(12)	Program AE Adjustment				●		

Note: After replacing IC1901, be sure to perform "Setting the Head Switching Point" and "Setting the Power Shut Off Level" in VCR adjustment.

2-7. CAMERA ADJUSTMENT

(1) Subcarrier Frequency Confirmation (Fig. 4-51)

PURPOSE	Confirm the subcarrier frequency before starting camera adjustment.			
TEST POINTS	ADJUST POINTS	CONDITION	EQUIPMENT/JIG	SPECIFICATION
·IC1211-3 PC ·TP1201-1 PC (GND)			·Frequency Counter	7.15909MHz ± 60Hz

Note: Basically, it is not necessary to adjust the subcarrier frequency. Be sure to check the frequency before adjustment, and adjust to only when it is drifted.
1) Connect the frequency counter to IC1211-3.
2) Confirm that the frequency is 7.15909MHz ± 60Hz. If the frequency is drifted, adjust the trimmer capacitor on IC1211 for 7.15909MHz ± 60Hz.

(2) Sensor Drive Pulse Lock Voltage Adjustment (Fig. 4-51)

PURPOSE	This adjustment sets the sensor drive pulse lock voltage to the specified value.			
TEST POINTS	ADJUST POINTS	CONDITION	EQUIPMENT/JIG	SPECIFICATION
·TP1201-8 PC ·TP1201-1 PC (GND)	·CT1201 PC (DRIVE PULSE LOCK VOLTAGE)		·DVM ·Non-Metalic Adj Driver	2.5V ± 0.1V

1) Connect the DVM to TP1201-8.
2) Adjust CT1201 for 2.5V ± 0.1V.
Note: Remove the left case. Be careful when applying an adjustment driver to CT1201 because the stray capacitance the driver may vary.

(3) Backfocus Adjustment (Fig. 4-3)

PURPOSE	The propose of this adjustment is to ensure proper focus tracking throughout the zoom range.			
TEST POINTS	ADJUST POINTS	CONDITION	EQUIPMENT/JIG	SPECIFICATION
	Relay Lens	Position the camera section 2 meters from the backfocus chart and illuminated the object with approx. 100 lux.	·Backfocus Adj. Driver ·Backfocus Adj. Chart ·Color Video Monitor	Same value between real distance and index on the ring.

1) Set the zoom to wide-angle and set the index on the focus ring to two (2) meters.
2) Loosen the relay lens lock screw.
3) Insert the backfocus adjustment driver into the backfocus adjustment point and turn it to the left and right to optimize the focus.
4) Set the zoom to telephoto end and confirm that the chart is in focus. If it is not focused, set the zoom to wide-angle and readjust step 3.
5) Confirm that the chart is approximately in focus at the both the wide-angle and telephoto ends with the focus ring set to two (2) meters.

Note: Adjust without assembling into the left case. After adjustment is completed, tighten the relay lens lock screw with the backfocus adjustment driver inserted into the adjustment point (holding the backfocus driver by hand) so that the adjusted position will not drift.

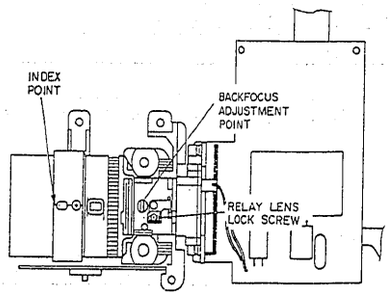

Fig. 4-3

(4) Sensor Sub Voltage Adjustment (Figs. 4-4, 4-51)

PURPOSE	This adjustment prevents vertical blooming.				
TEST POINTS	ADJUST POINTS		CONDITION	EQUIPMENT/JIG	SPECIFICATION
	·RT1201 (SENSOR SUB VOLTAGE)	PC	Point the camera at a 40W to 60W incandescent lump 1 meter away.	·Color Video Monitor	

1) Adjust RT1201 so that the band of blooming appearing in the vertical direction of the monitor screen just disappears.

Note: Stop RT1201 where blooming disappears and be careful not to turn it too for. Check that no roughness is present in the very bright section of the lamp.

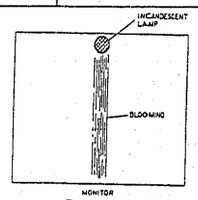

Fig. 4-4

(5) Luminance Setup Level Adjustment (Figs. 4-5, 4-51)

PURPOSE	This adjustment sets the brightness of the picture.				
TEST POINTS	ADJUST POINTS		CONDITION	EQUIPMENT/JIG	SPECIFICATION
·Video Out (AV OUT)	·RT1213 (LUMA SETUP)	PC	Cap the lens	Oscilloscope	40mV ± 10mVp-p (5.5 ± 1 IRE)

1) Connect the oscilloscope to video out (AV OUT).
2) Trigger the oscilloscope internally.
3) Adjust RT1213 for 40mV ± 10mVp-p from the blanking level to the center of the black level.

Fig. 4-5

(6) AIC Level Adjustment (Fig. 4-6, 4-51)

PURPOSE	This adjustment sets the balance point of the auto iris control.				
TEST POINTS	ADJUST POINTS		CONDITION	EQUIPMENT/JIG	SPECIFICATION
·Video Out (AV OUT)	·RT1209 (AIC)	PC	Aim the gray scale chart.	·Oscilloscope	710mV ± 20mVp-p (100 ± 3 IRE)

1) Connect the oscilloscope to video out (AV OUT).
2) Trigger the oscilloscope internally.
3) Adjust RT1209 for 710mV ± 20mVp-p from the blanking level to the center of the white level on the gray scale.

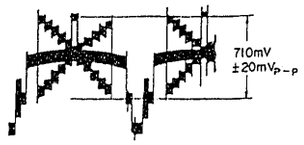

Fig. 4-6

(7) Matrix Adjustment (Figs. 4-7, 4-51)

PURPOSE	This adjustment corrects for unevenness in tint.					
TEST POINTS		ADJUST POINTS		CONDITION	EQUIPMENT/JIG	SPECIFICATION
·TP1201-3 ·TP1201-1 (GND)	PC PC	·RT1202 (MATRIX)	PC	Aim color bar chart	·Oscilloscope	Blue level become 70% ± 10% of the white level.

1) Connect the oscilloscope to TP1201-3.
2) Trigger the oscilloscope internally.
3) Adjust RT1202 so that the blue level becomes 70% ± 10% of the white level.

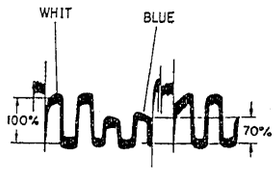

Fig. 4-7

(8) White Balance Hold Voltage Setting. (Fig. 4-51)

TEST POINTS		ADJUST POINTS	CONDITION	EQUIPMENT/JIG	SPECIFICATION
·TP1201-5 ·TP1201-1 (GND)	PC PC			·DC Power Supply (3.3V ± 0.05V)	

1) Connect the DC power supply (3.3V ± 0.05V) to TP1201-5.
2) Momentarily connect TP1201-5 to ground (TP1201-1) to preset the white balance circuit.

Note: White balance hold voltage setting is required prior to performing R-Y/B-Y setup adjustment and white balance adjustment.

(9) R-Y/B-Y Setup Adjustment (Figs. 4-8, 4-51)

PURPOSE	This adjustment sets the proper block balance of the picture.				
TEST POINTS	ADJUST POINTS		CONDITION	EQUIPMENT/JIG	SPECIFICATION
·Video Out (AV OUT)	·RT1214 (R-Y SETUP) ·RT1215 (B-Y SETUP)	PC PC	·Cap the lens ·Apply DC 3.3V to TP1201-5.	·Oscilloscope	Minimize carrier

1) Connect the oscilloscope to video out (AV OUT).
2) Trigger the oscilloscope internally.
3) Adjust RT1214 and RT1215 for minimum carrier in the waveform.

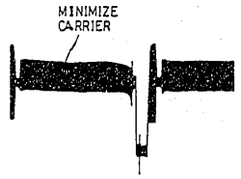

Fig. 4-8

(10) White Balance Adjustment (Figs. 4-9, 4-51)

PURPOSE	This procedure set the correct red and blue signal levels for proper white balance circuit operation.				
TEST POINTS	ADJUST POINTS		CONDITION	EQUIPMENT/JIG	SPECIFICATION
Video Out (AV OUT)	·RT1203 (BLU GAIN) ·RT1204 (RED GAIN)	PC PC	·Attach the C14 filter ·Aim the gray scale chart. ·Apply DC 3.3V to TP1201-5.	·Oscilloscope	Minimize carrier.

1) Connect the oscilloscope to video out (AV OUT).
2) Trigger the oscilloscope internally.
3) Adjust RT1203 and RT1204 to minimize the carriers at each step of the waveform.
4) Remove the DC power supply (3.3V) from TP1201-5.

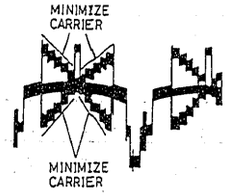

Fig. 4-9

(11) Chroma Level Adjustment (Figs. 4-10, 4-51)

PURPOSE	This adjustment sets the chroma level.				
TEST POINTS	ADJUST POINTS		CONDITION	EQUIPMENT/JIG	SPECIFICATION
Video Out (AV OUT)	·RT1205 (CHROMA LEVEL)	PC	·Attach the C14 filter ·Aim the gray scale chart.	·Oscilloscope	Red level is 460mV ± 50mV (64 ± 7 IRE)

1) Connect the oscilloscope to video out (AV OUT).
2) Trigger the oscilloscope internally.
3) Adjust RT1205 so that the red level of the waveform is 460mV ± 50mV.
4) Check that the tint of the chart and the tint of the picture are approximately matched at this time.

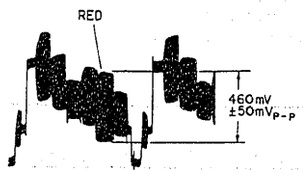

Fig. 4-10

(12) Program AE Adjustment (Fig. 4-51)

PURPOSE	This adjustment sets the shutter speed switching point.					
TEST POINTS		ADJUST POINTS		CONDITION	EQUIPMENT/JIG	SPECIFICATION
·TP1201-6 ·TP1201-7 ·TP1201-1 (GND)	PC PC PC	·RT1210 (AE ADJ 1) ·RT1211 (AE ADJ 2)	PC PC		·DVM ·DC Power Supply (5V)	

1) Connect the DVM to TP1201-10.
2) Adjust RT1210 so the voltage at TP1201-10 is 130mV ± 10mV.
3) Connect the DVM to TP1201-7.
4) Connect the DC power supply (5V) to TP1201-6.
5) Adjust RT1211 so the voltage at TP1201-7 is 3V ± 0.03V.
6) Measure the voltage at TP1201-7 when DC 5V is applied to TP1201-6 and when it is connect the ground (TP1201-1), and adjust RT1210 so the difference is 2V ± 0.05V.
7) Apply DC 5V to TP1201-6.
8) Adjust RT1210 so the voltage at TP1201-7 is 3V ± 0.02V.
9) Remove the DC power supply from TP1201-6.

2-8. ELECTRONIC VIEWFINDER (EVF) ADJUSTMENT

(1) Deflection Yoke Position Adjustment (Fig. 4-11)

PURPOSE	This adjustment procedure eliminates picture tilt in the EVF display.			
TEST POINTS	ADJUST POINTS	CONDITION	EQUIPMENT/JIG	SPECIFICATION
	·DEFLECTION YOKE	Aim the resolution chart.	·EVF Display	

1) Loosen the deflection yoke nut.
2) Turn the deflection yoke so that the EVF picture (chart) is horizontal, matching the edges of the CRT.

Note: After adjustment is completed, tighten the deflection yoke nut.

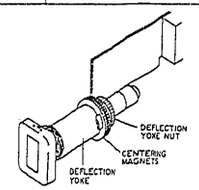

Fig. 4-11

(2) EVF Centering Adjustment (Fig. 4-11)

PURPOSE	This adjustment centers the image observed by the camera in the EVF display.			
TEST POINTS	ADJUST POINTS	CONDITION	EQUIPMENT/JIG	SPECIFICATION
	·CENTERING MAGNETS	Aim the resolution chart.	·EVF Display	

1) Remove the locking paint from the centering magnet.
2) Adjust the centering magnets until the center of the picture viewed by the camera is positioned in the center of the EVF display.

(3) EVF Vertical Size Adjustment (Fig. 4-52)

PURPOSE	This adjustment determines the vertical size of the image appearing in the EVF display				
TEST POINTS	ADJUST POINTS		CONDITION	EQUIPMENT/JIG	SPECIFICATION
	·RT802 (V.SIZE)	EVF	Aim the resolution chart.	·EVF Display	

1) Adjust RT802 so that the top and bottom edges of the chart match the top and edges of the CRT.

(4) EVF Brightness Adjustment (Fig. 4-52)

PURPOSE	This adjustment sets the brightness of the picture in the EVF display.				
TEST POINTS	ADJUST POINTS		CONDITION	EQUIPMENT/JIG	SPECIFICATION
	·RT805 (BRIGHT)	EVF	Aim the resolution chart.	·EVF Display	

1) Adjust RT805 to optimize the EVF picture.

(5) EVF Focus Adjustment (Fig. 4-52)

PURPOSE	This control adjusts for optimum focus of the electronic viewfinder picture.				
TEST POINTS	ADJUST POINTS		CONDITION	EQUIPMENT/JIG	SPECIFICATION
	·RT803 (FOCUS)	EVF	Aim the resolution chart.	·EVF Display	
1) Adjust RT803 so that the EVF picture is clear.					

2-8. AUTOFOCUS ADJUSTMENT

(1) Autofocus Sensor Position Adjustment (Fig. 4-12)

PURPOSE	This adjustment set the autofocus sensor position adjustment.			
TEST POINTS	ADJUST POINTS	CONDITION	EQUIPMENT/JIG	SPECIFICATION
	·SENSOR ADJUSTMENT SCREW	Aim the backfocus adjustment chart.	·Color Video Monitor	

Note: Perform this adjustment while all case assembled.

1) Remove the gum cap of the autofocus adjustment hole.
2) Place the FOCUS switch in the "AUTO" position.
3) Position the camera section two (2) meters from the backfocus adjustment chart and illuminate the object with approximately 100 lux.
4) Set the zoom ring to the telephoto position.
5) Turn the SENSOR ADJUSTMENT SCREW so that the index on the focus ring is two (2) meters.
6) Operate the autofocus from the near end to the infinity end and check that the chart is in focus with the index at two (2) meters.
7) Attach the gum cap to the autofocus adjustment hole.

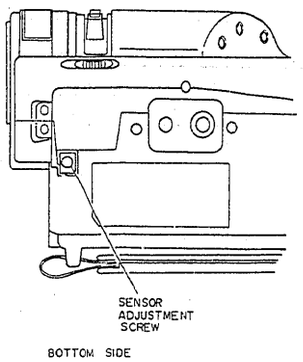

Fig. 4-12

2-10. ADJUSTMENTS WHICH CAN BE DONE USING A VECTORSCOPE

Note 1: Use the video output (AV output) as the test point for all adjustments and terminate the vectorscope with 75 ohms.
Note 2: Be sure to perform "(8) White Balance Hold Voltage Setting" before performing the adjustments in the table below.

ITEM No.	NAME OF ADJUSTMENT	SUBJECT	ADJUSTMENT POINT	PROCEDURE	Fig. No.
(9)	R-Y/B-Y Setup Adjustment	·Lens cap ·Apply DC 3.3V to TP1201-5.	RT1214 RT1215	1) Adjust RT1214 and RT1215 so that the bright spot is positioned at the center.	4-13
(10)	White Balance Adjustment	·Attach the C14 filter. ·Gray scale ·Apply DC 3.3V to TP1201-5.	RT1203 RT1204	1) Adjust RT1203 and RT1204 so that the bright spot is positioned at the center. 2) Remove the DC power supply (3.3V) from the TP1201-5.	4-13
(11)	Chroma Level Adjustment	·Attach the C14 filter. ·Color Bar	RT1205	1) Adjust RT1205 so that the red vector is 160% ± 5% when compared to the burst level. 2) Check that the tint of the chart and the tint of the picture are approximately matched at this time.	4-14

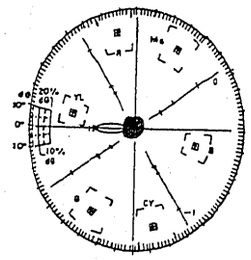

Fig. 4-13

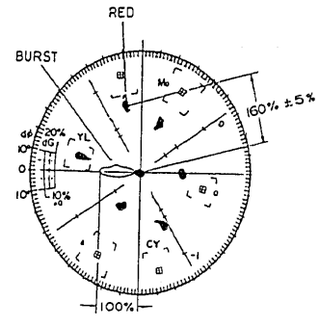

Fig. 4-14

2-11. ADJUSTMENT COMPONENTS LOCATIONS

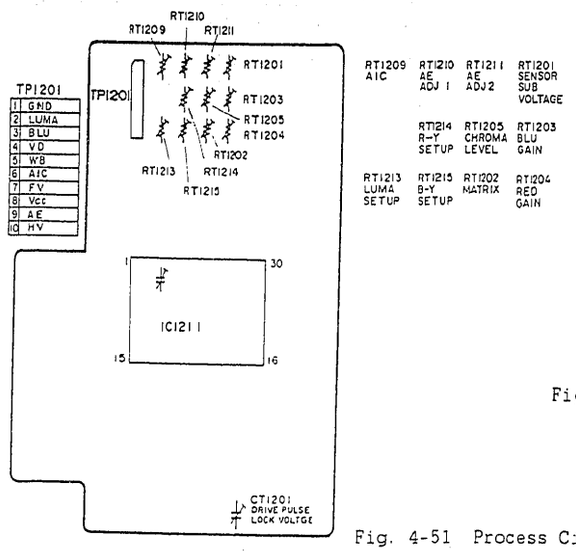

Fig. 4-51 Process Circuit Board (Side-B)

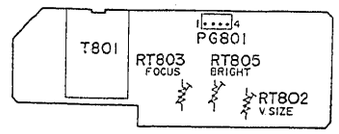

Fig. 4-52 Electronic Viewfinder (EVF) Circuit Board

3. VCR SECTION ADJUSTMENT

3-1. CIRCUIT BOARD LOCATIONS AND SERVICING POSITION

(1) Servicing Position - 1 (Adjustment)

1. Main Circuit Board
2. Jack Circuit Board
3. DC-DC Converter
4. Fuse Circuit Board

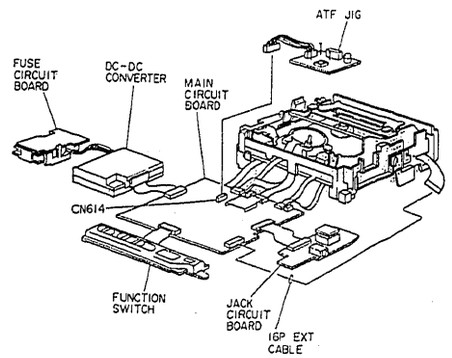

Fig. 4-101

(2) Servicing Position - 2
(When observing waveforms and voltages)
To operate the VCR section of the camera/recorder in this state, turn on the power in the following order.

1) Set the power switch to "VCR" position.
2) Connect the ATF jig to CN614 on the main circuit board.
3) Supply power while holding the F.FWD (fast forward) button on the function switch depressed.
4) Press the STOP button on the function switch.

Note: Set SW1 on the ATF jig to "OFF" position.
Do this with the ATF jig attached.

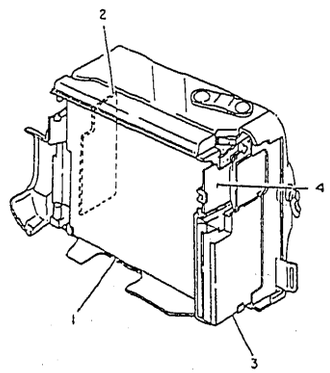

Fig. 4-102

(3) ATF JIG

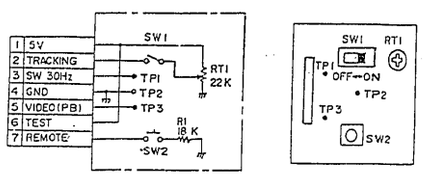

Fig. 4-103

3-2. TEST EQUIPMENT AND ALIGNMENT TAPES NECESSARY FOR ADJUSTMENT

- Test Equipment
  - Oscilloscope (dual trace)
  - Digital Voltmeter (DVM)
  - Frequency Counter
  - Color Video Monitor
  - Color Bar Generator
- Charts, etc.
  - Alignment Tape (20HSC-2)
  - Blank Tape
  - ATF Jig
  - DC Power Supply (DC 0 ~ 7V)

3-3. ADJUSTMENT CONDITION

1) Check that the camera section has been adjusted correctly before adjusting the VCR section
2) Connect this unit, a power supply and a color video monitor as shown in Fig. 4-1.
3) Use the 10:1 probe of the oscilloscope when other not specified.
4) When the "RECORD mode" is specified, load a blank tape, set the power switch "VCR" and press the REC button on the function switch.
5) Electrical adjustments of the VCR block cannot be done in the state that unit is shipped from the factory. Remove the laser trimmers on the circuit board and solder the specified semi-variable resistors. (See item 3-8).
6) Remove the audio IC before adjusting the luminance/chroma circuit.

3-4. PRESET POSITION OF SWITCHES AND CONTROLS DURING ADJUSTMENT

- POWER switch ..... "VCR" position

3-5. ADJUSTMENTS AFTER REPLACING MAJOR COMPONENTS IN THE VCR BLOCK

After replacing major components, perform adjustments, referring to the table below. The following table shows the minimum adjustments required after major components are placed.
The table below may not apply when several components are replaced, depending on the symptom of the defect.

ITEM	NAME OF ADJUSTMENT	NAME OF MAJOR COMPONENTS					
		MAIN C. B. A	CYLINDER ASSEMBLY	IC901	IC201	IC202	IC203
SYSTEM CONTROL CIRCUIT AND SERVO CIRCUIT SECTION							
(1)	Setting the Head Switching Point	●	●	●			
(2)	Setting the Power Shut Off Level	●	●	●	●	●	
LUMINANCE/CHROMA CIRCUIT SECTION							
(1)	AGC Adjustment				●		
(2)	Comb Filter Adjustment				●		
(3)	IR Adjustment				●		
(4)	Emphasis Input Level Adjustment				●		
(5)	Carrier Frequency Adjustment				●		
(6)	Deviation Adjustment				●		
(7)	Playback Luminance Siganl Level Adjustment	●			●		●
(8)	Record Luminance Signal Level Adjustment	●			●		
(9)	Record Chroma Siganl Level Adjustment	●				●	

ITEM	NAME OF ADJUSTMENT	NAME OF MAJOR COMPONENTS					
		IC204					
SYSTEM CONTROL CIRCUIT AND SERVO CIRCUIT SECTION							
(1)	Setting the Head Switching Point						
(2)	Setting the Power Shut Off Level						
LUMINANCE/CHROMA CIRCUIT SECTION							
(1)	AGC Adjustment						
(2)	Comb Filter Adjustment	●					
(3)	IR Adjustment						
(4)	Emphasis Input Level Adjustment	●					
(5)	Carrier Frequency Adjustment	●					
(6)	Deviation Adjustment	●					
(7)	Playback Luminance Siganl Level Adjustment						
(8)	Record Luminance Signal Level Adjustment						
(9)	Record Chroma Siganl Level Adjustment						

3-6. SYSTEM CONTROL CIRCUIT AND SERVO CIRCUIT SECTION

(1) Setting the Head Switching Point (Figs. 4-104, 4-151)

Note: Be sure to set the head switching point after replacing the cylinder and main circuit board (system control main microprocessor and EA ROM).
The head switching point can be set automatically when the following steps performed. Although the head switching point can be set with the disassembled VCR block (in the state shown in Fig. 4-102), be sure to connect the camera block checking the head switching point.

TEST POINTS		ADJUST POINTS	CONDITION	EQUIPMENT/JIG	SPECIFICATION
·TP1 (SW30) ·Video out (AV OUT) ·CN614	ATF MAIN			·ATF Jig ·Alignment Tape ·Oscilloscope	6H ± 0.5H

SETTING
1) Load an alignment tape. After checking that loading is complete, disconnect the power supply.
2) Connect the ATF jig to CN614 on the main circuit board.
3) Set the POWER switch to the "VCR" position.
4) Supply the power (DC 6~7V) while holding the PLAY button depressed.
5) Check that the camera/recorder enters the play mode automatically for several seconds and then the power is turned off automatically.
6) Disconnect the ATF jig from the CN614 and remove the power supply.

CONFIRMATION
Note: Be sure to connect the camera block for head switching point confirmation.
1) Set the power switch to "VCR" position.
2) Connect the ATF jig to CN614 on the main circuit board. (Set SW1 on the ATF jig to "OFF" position.)
3) Supply power while holding the F.FWD (fast forward) button on the function switch depressed.
4) Press the STOP button on the function switch.
5) Load an alignment tape and place the instrument in the PLAY mode.
6) Connect an oscilloscope terminated with 75 ohms to video out (AV OUT).
7) Trigger the oscilloscope at SW30Hz. (Use TP1 on the ATF jig.)
8) Set the oscilloscope to the (-) slope and confirm that the trailing edge of the SW30Hz signal is 6H ± 0.5H (horizontal) line before the start of channel-1 vertical sync.
9) Set the oscilloscope to the (+) slope and confirm that the leading edge of the SW30Hz signal is 6H ± 0.5H (horizontal) line before the start of channel-2 vertical sync.

Note: The waveform of channel-1 and channel-2 video signals in the diagram may be opposite depending on the alignment tape.

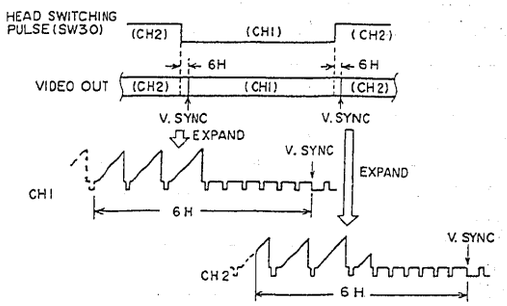

Fig. 4-104

(2) Setting the Power Shut Off Level (Figs. 4-151, 4-152)

Note: Be sure to set the power shut off level after replacing the cylinder assembly and main circuit board (system control main microprocessor and EA ROM).
The power shut off level can be set automatically by performing the following steps. Be sure to connect the camera block when setting the power shut off level.

TEST POINTS		ADJUST POINTS	CONDITION	EQUIPMENT/JIG	SPECIFICATION
·CN614 ·CN051-2 ·CN051-1 (GND)	MAIN FUSE FUSE			·ATF Jig ·Blank Tape ·Color Video Monitor ·DC Power Supply (5~7V)	

SETTING
1) Loading a blank tape and set the camera/recorder to the RECORD mode.
2) Connect the DVM to CN051-2 on the fuse circuit board. (Use CN051-1 as ground.)
3) Adjust the voltage control of DC power supply so the voltage at CN051-2 is 5.6V ± 0.05V.
4) Set the camera/recorder to the POWER SAVE mode and then disconnect the power supply.
5) Connect the ATF jig to CN614 on the main circuit board.
6) Set the POWER switch to the VCR position.
7) While holding the REWIND button depressed, supply the power with the voltage (CN051-2 is 5.6V ± 0.05V) set in step 3.
8) Check that the camera/recorder enters record mode automatically for several seconds and then the power is turned off automatically.
Check that the power voltage in the record mode is 5.6V ± 0.05V.
If it is not 5.6V, set it to 5.6V and then perform adjustment from step 4 again.
9) Disconnect the ATF jig from CN614 and remove the power supply.

CONFIRMATION
1) Set the power switch to CAM position.
2) Load a blank tape and set the camera/recorder to the RECORD mode.
3) Connect the DVM to CN051-2 on the fuse circuit board. (Use CN051-1 as ground.)
4) Check that the unit is shut off when the power voltage (CN051-2) is set to DC 5.6V.

3-7. LUMINANCE/CHROMA CIRCUIT SECTION

(1) AGC Adjustment (Figs. 4-105, 4-151)

TEST POINTS	ADJUST POINTS		CONDITION	EQUIPMENT/JIG	SPECIFICATION
Video Out (AV OUT)	·RT121 (AGC 2)	MAIN	·Apply a color bar signal (1Vp-p) to the AV INPUT jack. ·RECORD mode.	·Oscilloscope ·Color Bar Generator ·Blank Tape	1V ± 0.02Vp-p

1) Connect an oscilloscope terminated with 75 ohms to video out.
2) Adjust RT121 for 1V ± 0.02Vp-p.

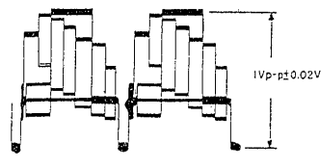

Fig. 4-105

(2) Comb Filter Adjustment (Figs. 4-106, 4-151)

TEST POINTS		ADJUST POINTS		CONDITION	EQUIPMENT/JIG	SPECIFICATION
·TP207 ·TP212 (GND)	MAIN MAIN	·RT123 (COMB FILTER PHASE) ·RT125 (COMB FILTER GAIN 2)	MAIN MAIN	·Apply a color bar signal (1Vp-p) to the AV INPUT jack. ·RECORD mode.	·Oscilloscope ·Color Bar Generator ·Blank Tape	Minimize the residual chroma components.

1) Connect the oscilloscope to TP207.
2) Adjust RT123 and RT125 to minimize the residual chroma components.

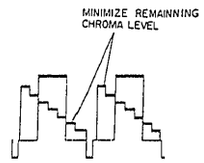

Fig. 4-106

(3) Trap Frequency Adjustment (Figs. 4-107, 4-151)

TEST POINTS		ADJUST POINTS		CONDITION	EQUIPMENT/JIG	SPECIFICATION
·TP204 ·TP209 ·TP212 (GND)	MAIN MAIN MAIN	·RT126 (IR ADJ 1)	MAIN	·Apply a color bar signal (1Vp-p) to the AV INPUT jack. ·RECORD mode.	·Oscilloscope ·Color Bar Generator ·Blank Tape	Minimize the residual chroma components.

1) Connect the oscilloscope to TP204.
2) Connect ground (TP212) to TP209.
3) Adjust RT126 to minimize the residual chroma components.
4) Remove the TP209 from the ground.

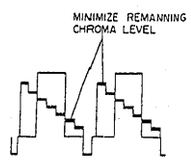

Fig. 4-107

(4) Emphassis Input Level Adjustment (Figs. 4-108, 4-151)

TEST POINTS		ADJUST POINTS		CONDITION	EQUIPMENT/JIG	SPECIFICATION
·TP206 ·TP212 (GND)	MAIN MAIN	·RT128 (EMPH. INPUT LEVEL)	MAIN	·Apply a color bar signal (1Vp-p) to the AV INPUT jack. ·RECORD mode.	·Oscilloscope ·Color Bar Generator ·Blank Tape	0.45V ± 0.01Vp-p

1) Connect the oscilloscope to TP206.
2) Adjust RT128 for 0.45V ± 0.01Vp-p.

Fig. 4-108

(5) Carrier Frequency Adjustment (Figs. 4-109, 4-151)

TEST POINTS		ADJUST POINTS		CONDITION	EQUIPMENT/JIG	SPECIFICATION
·TP201 ·TP212 (GND)	MAIN MAIN	·RT130 (Fo ADJ 1)	MAIN	·Apply a white (100%) signal to the AV INPUT jack. ·RECORD mode.	·Oscilloscope ·Color Bar Generator ·Blank Tape	238nS ± 3nS

1) Connect the oscilloscope to TP201.
2) Adjust RT130 so the period of the widest pulse is 238nS ± 3nS.

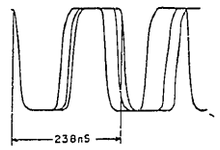

Fig. 4-109

(6) Deviation Adjustment (Figs. 4-110, 4-151)

TEST POINTS		ADJUST POINTS		CONDITION	EQUIPMENT/JIG	SPECIFICATION
·TP201 ·TP212 (GND)	MAIN MAIN	·RT129 (DEV Fo)	MAIN	·Apply a white (100%) signal to the AV INPUT jack. ·RECORD mode.	·Oscilloscope ·Color Bar Generator ·Blank Tape	185nS ± 2nS

1) Connect the oscilloscope to TP201.
2) Adjust RT129 so the period of the narrowest pulse is 185nS ± 2nS.

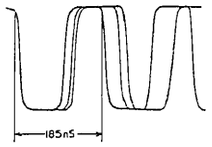

Fig. 4-110

(7) Playback Luminance Signal Level Adjustment (Figs. 4-111, 4-112, 4-151)

TEST POINTS		ADJUST POINTS		CONDITION	EQUIPMENT/JIG	SPECIFICATION
·TP217 ·TP212 (GND) ·Video Out (AV OUT)	MAIN MAIN	·RT133 (PB LUMA LEVEL B) ·RT135 (PB LUMA LEVEL D)	MAIN MAIN	·Playback the alignment tape	·Oscilloscope ·Alignment Tape (20HSC-2)	·0.5V ± 0.01Vp-p ·1V ± 0.02Vp-p

1) Connect the oscilloscope to TP217.
2) Adjust RT133 so that the waveform of TP217 is 0.5V ± 0.01Vp-p. (Fig. 4-111)
3) Connect an oscilloscope terminated with 75 ohms to video out.
4) Adjust RT135 so that the waveform of video out is 1V ± 0.02Vp-p. (Fig. 4-112)

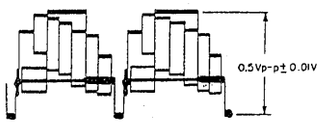

Fig. 4-111

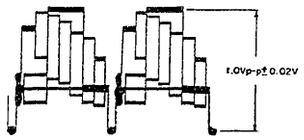

Fig. 4-112

(8) Record Luminance Signal Level Adjustment (Figs. 4-113, 4-151)

TEST POINTS		ADJUST POINTS		CONDITION	EQUIPMENT/JIG	SPECIFICATION
·TP215 ·TP212 (GND)	MAIN MAIN	·RT201 (REC LUMA LEVEL)	MAIN	·Apply a color bar signal (1Vp-p) to the AV INPUT jack. ·RECORD mode.	·Oscilloscope ·Color Bar Generator ·Blank Tape	230mV ± 10mVp-p

1) Connect the oscilloscope to TP215.
2) Adjust RT201 so that the record luminance level is 230mV ± 10mVp-p.

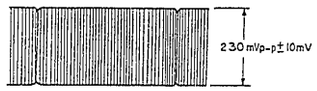

Fig. 4-113

(9) Record Chroma Signal Level Adjustment (Figs. 4-114, 4-151)

TEST POINTS		ADJUST POINTS		CONDITION	EQUIPMENT/JIG	SPECIFICATION
·TP213 ·TP212 (GND)	MAIN MAIN	·RT215 (REC CHROMA LEVEL)	MAIN	·Apply a color bar signal (1Vp-p) to the AV INPUT jack. ·RECORD mode.	·Oscilloscope ·Color Bar Generator ·Blank Tape	120mV ± 5mVp-p

1) Connect the oscilloscope to TP213.
2) Adjust RT215 so that the burst level on the record chroma level is 120mV ± 5mVp-p.

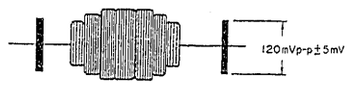

Fig. 4-114

3-8. ADJUSTMENT COMPONENTS LOCATIONS

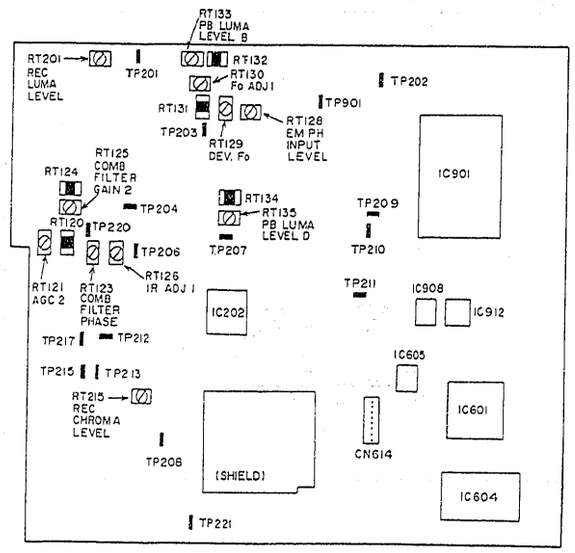

Fig. 4-151 Main Circuit Board (Side - A)

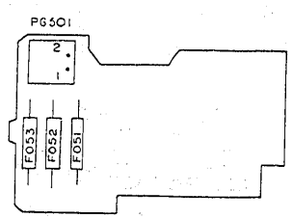

Fig. 4-152 Fuse Circuit Board

Note: Electrical adjustments of the VCR block cannot be done in the state that the unit is shipped from the factory. Unsolder the laser trimmers on the circuit board and solder the specified semi-variable resistors. (See the table below.) Insulate the terminals shown in Fig. 4-153 when soldering.

ADJUST POINT	SEMI-VARIABLE RESISTOR (Ω)	C. B. A	NAME OF ADJUSTMENT
RT121	50 k	MAIN	AGC 2
RT123	500	MAIN	COMB FILTER PHASE
RT125	50 k	MAIN	COMB FILTER GAIN 2
RT126	20 k	MAIN	IR ADJ 1
RT128	2 k	MAIN	EMPH. INPUT LEVEL
RT129	5 k	MAIN	DEV. Fo
RT130	10 k	MAIN	Fo ADJ. 1
RT133	2 k	MAIN	PB LUMA LEVEL B
RT135	2 k	MAIN	PB LUMA LEVEL D

Note: Insulate the terminals shown in Fig. 4-153 when soldering.
Adjust the semi-variable resistors within the range shown in Fig. 4-153.

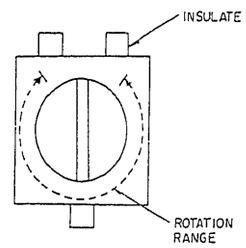

Fig. 4-153

CHAPTER 5 SCHEMATIC DIAGRAMS AND CIRCUIT BOARD DIAGRAMS

WHEN USING THIS SERVICE REFERENCE MATERIAL

1. Markings in Schematic and Circuit Board Diagrams

(1) Parts with marks "■" attached to circuit numbers in the schematic and circuit board diagrams are discrete components.
(2) Parts with marks ② in the circuit board diagrams are leadless jumpers.

2. How to Read Abbreviations

Values, dielectric resistances (power capacitances), tolerances, grades of resistors (excluding variable resistors, etc.) and capacitors are indicated in the schematic diagrams using abbreviations. Collate these abbreviations and the following tables for reading abbreviations to replace parts correctly.

2-1. Resistors

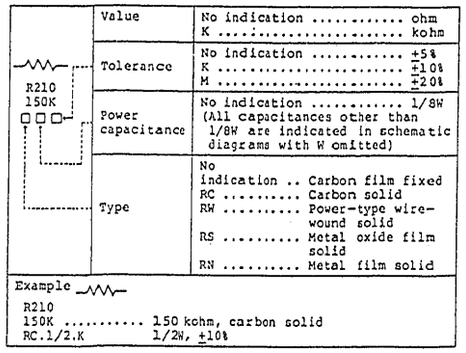

2-2. Capacitors

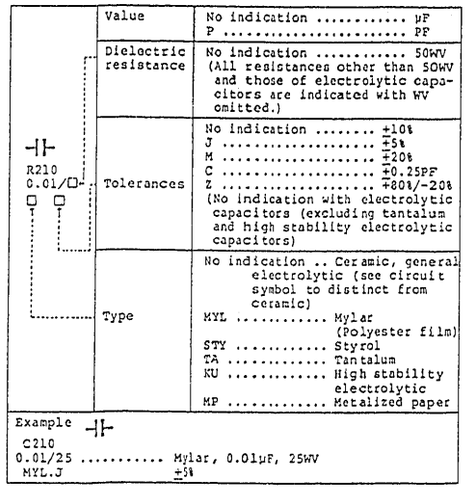

3. How to Read Capacitance of Resistance-Type Capacitors and Coils

3-1 Capacitors

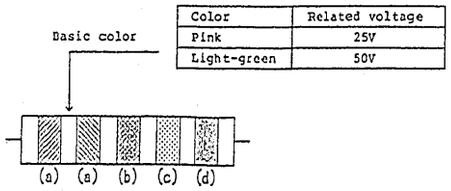

Color	Related voltage
Pink	25V
Light-green	50V

Color	Capacitance (a)	Multiplier (b)	Tolerance (c)	Characteristics (d)
Black	0	10^0	±20%	For temperature compensation
Brown	1	10^1		
Red	2	10^2		
Orange	3	10^3		
Yellow	4	10^4		
Green	5	10^5		
Blue	6	10^6		
Purple	7			
Gray	8		±30%	High permittivity type
White	9			For temperature compensation
Gold			±5%	
Silver			±10%	

3-2 Coils

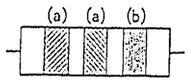

4. Cautions on Use of MOS ICs

(1) MOS ICs are inserted in black foam for shipment. This foam is a conductor which short-circuits between the leads to prevent damage. Do not remove ICs from this foam during storage. Avoid removing ICs from this foam, placing them on plastic which is likely to be charged with static electricity or inserting them into styrol foam.
(2) High voltages may be applied during soldering caused by leakages from the soldering iron, so be sure to ground the tip of the soldering iron or use a low voltage soldering iron.
(3) The human body and clothes made of synthetic fibres or nylon gloves may be charged with several thousands volts of static electricity because of friction, so workers should be grounded.
(4) Be sure to ground measuring instruments such as oscilloscopes, VTVMs, etc. used for repairs.

5. Measure the voltages at each section with the negative side of power supply as a reference.

The voltages in the camera section are measured with the VTR in the record mode, and those in the VTR section are measured in the record and playback modes.

* Voltages in ( ) are in the record mode.
* One voltage value is common for recording and playback.

LEADLESS COMPONENT IDENTIFICATION

1. Leadless Transistors

The leadless transistor number is indicated by a code on its surface, using one letter, one letter and one numeral, two letters, two letters and one numeral, two numerals, two numerals and one letter, or three letters.

Letter	Transistor Number	Letter	Transistor Number
A	2SB709	H	2SA1036K
A(R)	2SB1218R(AR)	I	2SB792
A(S)	2SB766S(AS)	J	2SC2735
A(J)	2SB1000J(AJ)	K	2SA1036
B	2SC1621	K(P)	2SC2413P(KP)
B(J)	2SB1001J(BJ)	L	2SC2462
B(R)	2SC4081R(BR)	M	2SA1052
B(R)	2SC2412AR(BR)	N	2SC1653
B(S)	2SC2412KS(BS)	N(E)	2SD1306E(NE)
C	2SA1122	P	2SD814
C(L)	2SD999L(CL)	P(E)	2SA1171E(PE)
C(R)	2SB710R(CR)	Q	2SC2620
C(R)	2SC4097R(CR)	Q(O)	2SC2714O(QO)
C(R)	2SC2411R(CR)	R	2SC2618
C(Q)	2SC2411KQ(CQ)	S	2SA1121
D	2SC2463	S(Q)	2SC3082KQ(SQ)
D(L)	2SB798L(DL)	U	2SC2404
E	2SA1022	W	2SD602
F	2SC2619	Y	2SD601
F(S)	2SA1037KS(FS)	Y(R)	2SD1819R(YR)
F(R)	2SA1576R(FR)	Z	2SD874
-	-	-	-
AA(S)	2SD1757KS(AAS)	DB(R)	2SD1766R(DBR)
BC(R)	2SB1188R(BCR)	IR(D)	2SA1484D(IRD)
BF(R)	2SB1308R(BFR)		
-	-	-	-
1D(T)	2SD1328T(1DT)	1C(R)	2SB902R(1CR)
-	-	-	-
B(3)	2SC1621(3)(B3)	L(6)	MMBC1623(6)(L6)
C(7)	2SA811(7)(C7)	L(6)	2SC1623(6)(L6)
L(7)	2SC2812(7)(L7)	F(2)	2SC1009(2)(F2)
M(6)	2SA812(6)(M6)	M(6)	2SA1179(6)(M6)
N(4)	2SC1653(4)(N4)		
-	-	-	-
D(16)	2SC1622A(16)(D16)	R(25)	2SC3356(25)(R25)
R(35)	2SC3583(35)(R35)	R(45)	2SC3585(45)(R45)
Y(25)	NTM3906(25)(Y25)		
-	-	-	-
1(D)	2SC3127D(1D)		
-	-	-	-
S1	FMS1	S2	FMS2
T1	IMT1	W1	FMW1
W2	FMW2	W3	FMW3
X1	IMX1	Y1	FMY1
Y3	FMY3	Z1	IMZ1
Z2	IMZ2		
-	-	-	-
4R	XN1C301	5H	XN4501
5K	XN4401		
Digital Transistor			
04	DTC114TK	06	DTC144TK
13	DTA143EK	15	DTA124K
15(s)	DTA124EU	16	DTA144EK
16(s)	DTA144EU	23	DTC143EK
24	DTC114EK	24(s)	DTC114EU
25	DTC124K	25(s)	DTC124EU
26	DTC144K	26(s)	DTC144EU
33	DTA143XK	43	DTC143XK
52	DTA123YK	64	DTC114YK
-	-	-	-
6B	UN5112	8B	UN5212
-	-	-	-
F52	DTB123	G21	DTD113ZK
H03	DTC343TK	H27	DTC363EK
R31	FP1L2Q		
-	-	-	-
A1	FMA1	A2	FMA2
B2	IMB2	C2	FMC2
D2	IMD2	G1	FMG1
G2	FMG2	G5	FMG5
H2	IMH2		

Letter	Transistor Number	Letter	Transistor Number
FET			
G	2SK302	J	2SK208
K	2SK160	W	2SK322
X	2SK157	X(4)	2SK94(4)(X4)
X(17)	2SK425(17)(X17)		
Y	2SK197	Z	2SK217
-	-	-	-
XA	2SK980		
-	-	-	-
3	2SK620	3(O)	2SK621(O)(30)
-	-	-	-
1M	2SA1052	1F	2SK321
1K	2SK316	2B	2SK374

* "(s)" in the above table shows a component with smaller size.
* Codes on the digital transistors show only the transistor numbers.

(1) Identification for two letters.
Use this code and the following chart for component identification.

Example:

Code	Number
CD	2SA1122D
LD	2SC2462D

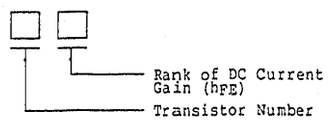

Fig.5-1 Leadless Transistor Code

(2) Identification for two types of one letter and one numeral.
Use this code and the following chart for component identification.

Letter	Transistor Number
L	2SC1623

Example:

Code	Number
L5	2SC1623(5)
L6	2SC1623(6)

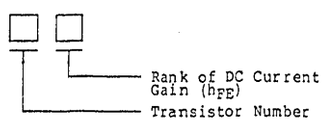

Fig.5-2 Leadless Transistor Code

Example:

Code	Number
1D	2SC3127D

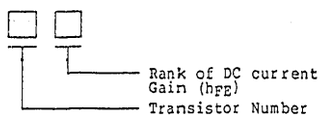

Note: Codes S1, S2, T1, W1, W2, W3, X1, Y1, Y3, Z1 and Z2 show only the transistor numbers.

Fig.5-3 Leadless Transistor Code

(3) Identification for one numeral and two letters.
Use this code and the following chart for component identification.

Example:

Code	Number
1FQ	2SK321Q

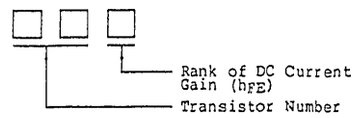

Fig.5-4 Leadless Transistor Code

(4) Identification for one letter and two numerals.
Use this coce and the following chart for component identification.

Example:

Code	Number
R25	25C3356

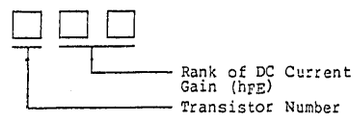

Fig. 5-5 Leadless Transistor Code

(5) Identification for two letters and one numeral.
Use this code and the following chart for component identification.

Example:

Code	Number
DV5	2SD596

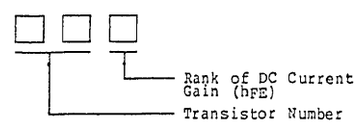

Fig. 5-6 Leadless Transistor Code

(6) Identification for three letters.
Use this code and the following chart for component identification.

Example:

Code	Number
AAS	2SD1757KS

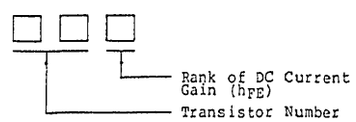

Fig. 5-7 Leadless Transistor Code

2. Leadless Diodes

Leadless diode numbers are indicated by a code on the surface, using one letter and one numeral, two letters, two letters and one numeral, two numerals, two numerals and one letter, or three numerals.
Use this code and the following chart for component identification.

Code	Diode Number	Code	Diode Number
BE	1SV172		
MC	MA153	MC(s)	MA143
MH	MA151K	MH(s)	MA141K
MN	MA151WA	MN(s)	MA141WA
MO	MA152WA		
MT	MA151WK	MT(s)	MA141WK
MU	MA152WK		
-	-	-	-
M1D	MA160	M1P	MA714
M2A	MA122	S1A	1SR143
-	-	-	-
N	DAN202K	Z	DA106K
-	-	-	-
A3	1S2835	A5	1S2837
C1	HSM88S	C2	HSM276S
-	-	-	-
1A	MA110		
-	-	-	-
3.0L	MA3030L	4.3L	MA3043L
4.7M	MA3047M	5.1M	MA3051M
5.1L	MA3051L	5.6M	MA3056M
6.2L	MA3062L	6.8M	MA3068
6.8M	MA3068M	7.5H	MA3075H
7.5L	MA3075L	8.2M	MA3082M
9.1M	MA3091	9.1M	MA3091M
10L	MA3100L	56M	MA3056M
75L	MA3075L	82M	MA3082M
91M	MA3091M		
-	-	-	-
20	HZM6-B	27	RD2.7M-B
30	RD3.0M-B	51	RD5.1M-B2
56	RD5.6M-B	91	RD9.1M-B
-	-	-	-
102	RD10M-B2	122	RD12M-B2
163	RD16M-B3	182	RD18M-B2
271	RD2.7M-B	272	RD2.7M-B2
301	RD3.0M-B	362	RD3.6M-B2
391	RD3.9M-B1	512	RD5.1M-B2
561	RD5.6M-B	621	RD6.2M-B1
681	RD6.8M-B	683	RD6.8M-B3
911	RD9.1M-B		

* "(s)" in the above table shows a component with smaller size.

3. Leadless Resistors

The resistor value is indicated on the surface of the component, using a three-digit numbers, or one letter and one numeral.

(1) Identification for three digit numbers.
Read this code following the same procedure as when reading the color code on discrete resistors.

Example:

Code	Value
330	33×10^0 = 33 ohms
561	56×10^1 = 560 ohms
123	12×10^3 = 12K ohms
1R2	1 + 0.2 = 1.2 ohms
	(R: Decimal point)

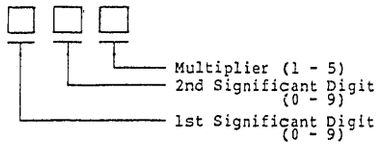

Fig. 5-8 Leadless Resistor Code

(2) Identification for one letter and one numeral.
Use this code and the following chart for component identification.

Letter	Value	Letter	Value	Letter	Value
A	1	J	2.2	S	4.7
C	1.2	L	2.7	U	5.6
E	1.5	N	3.3	W	6.8
G	1.8	Q	3.9	Y	8.2

Example:

Code	Value
A1	1×10^1 = 10 ohms
G2	1.8×10^2 = 180 ohms
L3	2.7×10^3 = 2700 ohms
S4	4.7×10^4 = 47K ohms
W5	6.8×10^5 = 680K ohms

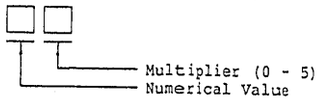

Fig. 5-9 Leadless Resistor Code

4. Leadless Capacitors

The capacitance value is indicated on the surface of the component, using body color and one letter, or one letter and one numeral.

(1) Identification for body color and one letter.

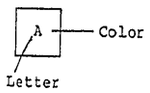

Body Color	Letter	Value
Red	A	1(PF)
	C	2
	E	3
	G	4
	J	5
	L	6
	N	7
	Q	8
	S	9
Black	A	10(PF)
	C	12
	E	15
	G	18
	J	22
	L	27
	N	33
	Q	39
	S	47
	U	56
	W	68
	Y	82

Body Color	Letter	Value
Blue	A	100(PF)
	C	120
	E	150
	G	180
	J	220
	L	270
	N	330
	Q	390
	S	470
	U	560
	W	680
	Y	820
White	A	0.001(μF)
	E	0.0015
	J	0.0022
	L	0.0027
	N	0.0033
	S	0.0047
	W	0.0068
Green	A	0.01(μF)
	E	0.015
	J	0.022
	N	0.033
	S	0.047
	U	0.056
	W	0.068
	Y	0.082
Yellow	A	0.1(μF)

Example:

Color	Code	Value
Red	A	1PF
Black	A	10PF

(2) Identification for one letter and one numeral.

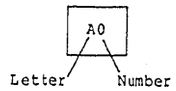

Letter /Number	Value
A0	1(PF)
H0	2
M0	3
d0	4
f0	5
m0	6
n0	7
t0	8
y0	9
A1	10(PF)
C1	12
E1	15
G1	18
J1	22
L1	27
N1	33
Q1	39
S1	47
U1	56
W1	68
Y1	82

Letter /Number	Value
A2	100(PF)
C2	120
E2	150
G2	180
J2	220
L2	270
N2	330
Q2	390
S2	470
U2	560
W2	680
Y2	820
A3	0.001(μF)
E3	0.0015
J3	0.0022
N3	0.0033
S3	0.0047
W3	0.0068
A4	0.01(μF)
E4	0.015
J4	0.022
N4	0.033
S4	0.047
U4	0.056
W4	0.068
A5	0.1

Example:

Letter /Number	Value
A0	1PF
A1	10PF

5. Leadless Jumper

The leadless jumper is indicated as shown below.

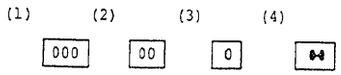

CIRCUIT BOARD CONNECTION DIAGRAM

CAMERA SECTION

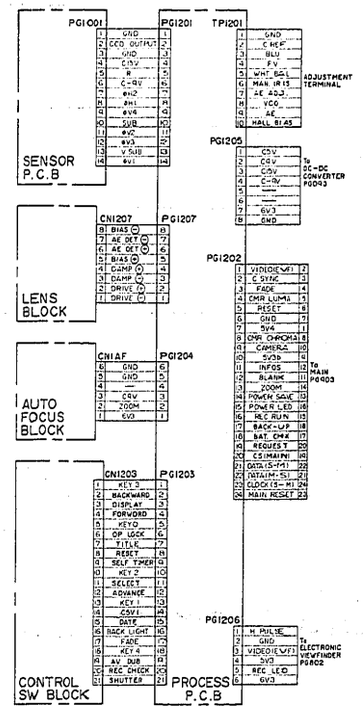

VTR SECTION

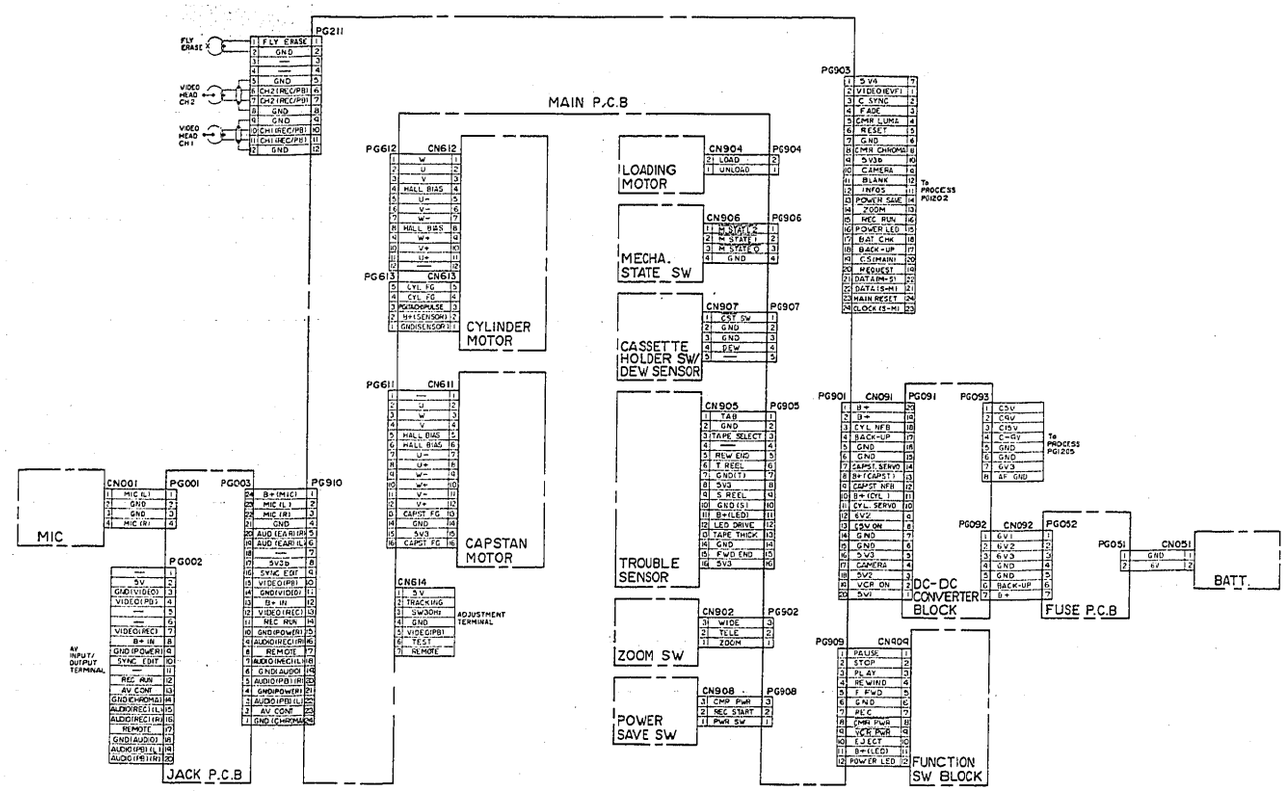

ELECTRONIC VIEWFINDER (EVF) SECTION

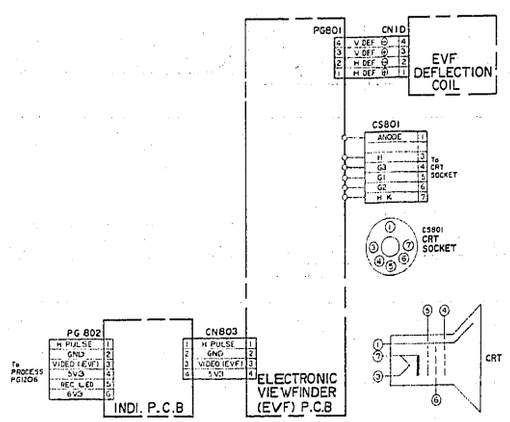

AUTO FOCUS BLOCK

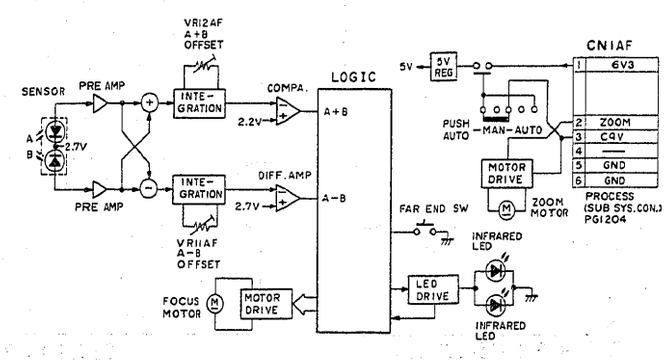

AUTO FOCUS BLOCK

SENSOR SCHEMATIC

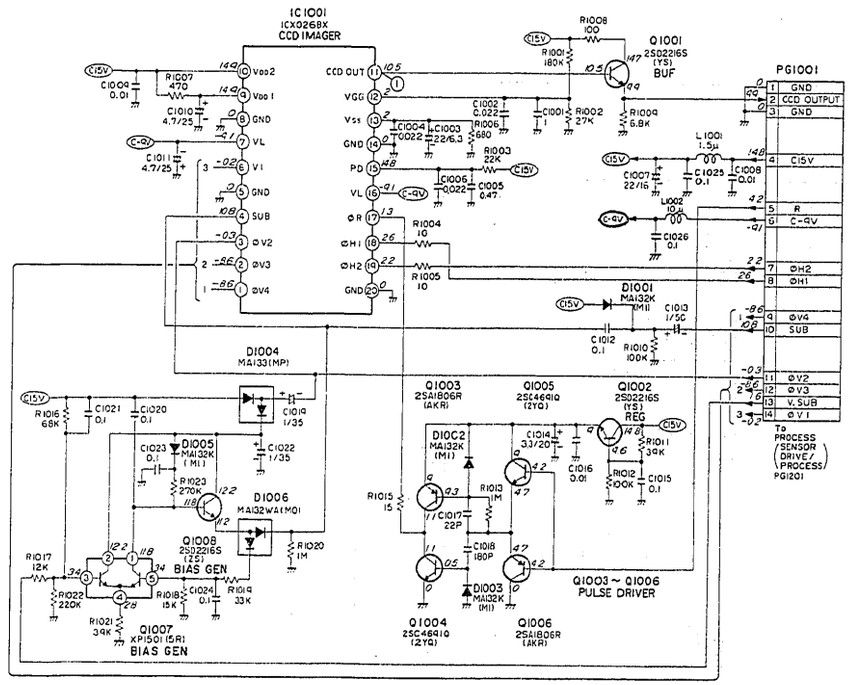

SENSOR CIRCUIT BOARD

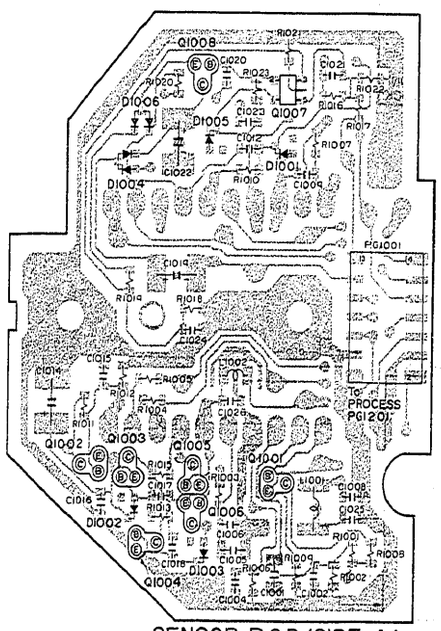

SENSOR P.C.B (SIDE A)

SENSOR P.C.B

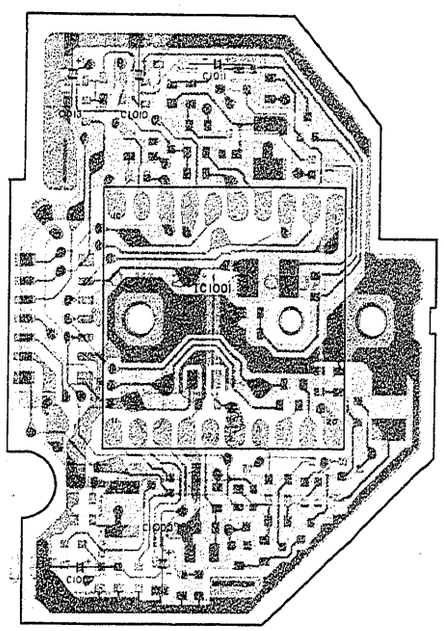

SENSOR P.C.B (SIDE B)

: SIDE A

: SIDE A
: SIDE B

1-A IC1001-11 550mVp-p 0.2V/20.0μ sec. cm COLOR CHART

1-A IC1201-2 5.0Vp-p 1V/20.0μ sec. cm COLOR CHART

2-A IC1201-3 5.0Vp-p 1V/20.0μ sec. cm COLOR CHART

3-A IC1201-4 5.0Vp-p 1V/20.0μ sec. cm COLOR CHART

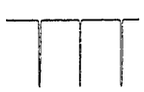

4-A IC1201-5 5.0Vp-p 1V/5.0msec. cm COLOR CHART

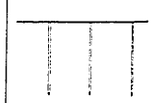

5-A IC1201-6 5.0Vp-p 1V/20.0μ sec. cm COLOR CHART

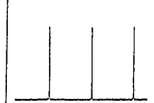

6-A IC1201-7 5.0Vp-p 1V/5.0msec. cm COLOR CHART

7-A IC1201-8 5.0Vp-p 1V/20.0μ sec. cm COLOR CHART

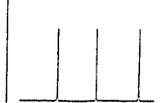

8-A IC1202-1 3.0Vp-p 1V/50.0nsec. cm COLOR CHART

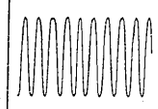

9-A IC1202-4 5.0Vp-p 1V/100nsec. cm COLOR CHART

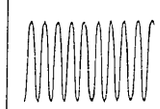

10-A IC1202-6 1.5Vp-p 0.5V/50.0nsec. cm COLOR CHART

11-A IC1202-20 4.5Vp-p 1V/100nsec. cm COLOR CHART

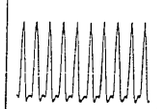

12-A IC1202-24 4.5Vp-p 1V/100nsec. cm COLOR CHART

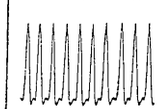

13-A IC1202-26 5.0Vp-p 1V/20.0μ sec. cm COLOR CHART

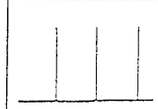

14-A IC1202-30 5.0Vp-p 1V/20.0μ sec. cm COLOR CHART

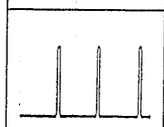

15-A IC1202-31 5.0Vp-p 1V/20.0μ sec. cm COLOR CHART

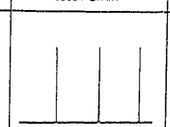

16-A IC1202-32 5.0Vp-p 1V/20.0μ sec. cm COLOR CHART

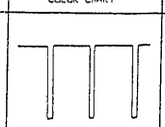

17-A IC1203-1 350mVp-p 0.1V/20.0μ sec. cm COLOR CHART

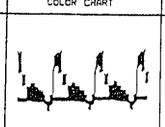

18-A IC1203-13 750mVp-p 0.2V/20.0μ sec. cm COLOR CHART

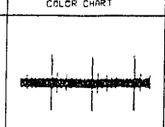

19-A IC1203-14 280mVp-p 0.1V/20.0μ sec. cm COLOR CHART

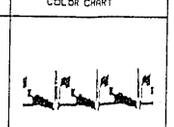

20-A IC1203-15 300mVp-p 0.1V/20.0μ sec. cm COLOR CHART

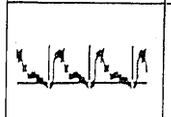

21-A IC1203-16 300mVp-p 0.1V/20.0μ sec. cm COLOR CHART

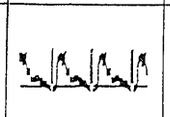

22-A IC1203-17 550mVp-p 0.1V/20.0μ sec. cm COLOR CHART

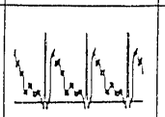

23-A IC1203-18 550mVp-p 0.1V/20.0μ sec. cm COLOR CHART

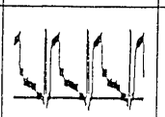

24-A IC1203-20 550mVp-p 0.1V/20.0μ sec. cm COLOR CHART

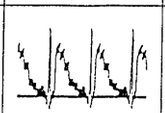

25-A IC1203-21 550mVp-p 0.1V/20.0μ sec. cm COLOR CHART

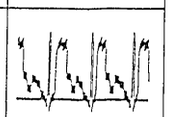

26-A IC1205-1 210mVp-p 50mV/20.0μ sec. cm COLOR CHART

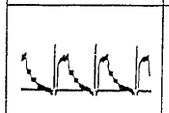

27-A IC1205-6 500mVp-p 0.1V/20.0μ sec. cm COLOR CHART

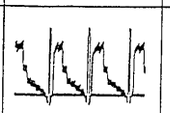

28-A IC1205-7 200mVp-p 50mV/20.0μ sec. cm COLOR CHART

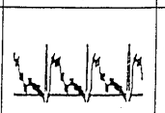

29-A IC1205-9 500mVp-p 0.1V/20.0μ sec. cm COLOR CHART

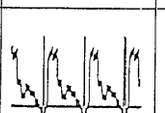

30-A IC1205-11 300mVp-p 0.1V/20.0μ sec. cm COLOR CHART

31-A IC1205-15 140mVp-p 50mV/20.0μ sec. cm COLOR CHART

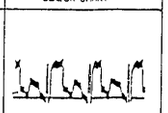

32-A IC1205-21 300mVp-p 0.1V/20.0μ sec. cm COLOR CHART

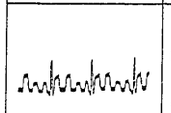

33-A IC1205-23 520mVp-p 0.1V/20.0μ sec. cm COLOR CHART

34-A IC1205-24 340mVp-p 0.1V/20.0μ sec. cm COLOR CHART

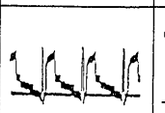

35-A IC1210-1 480mVp-p 0.1V/20.0μ sec. cm COLOR CHART

36-A IC1210-7 430mVp-p 0.1V/20.0μ sec. cm COLOR CHART

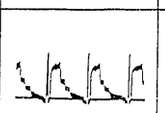

37-A IC1210-9 320mVp-p 0.1V/20.0μ sec. cm COLOR CHART

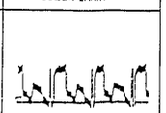

38-A IC1210-17 500mVp-p 0.1V/20.0μ sec. cm COLOR CHART

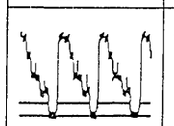

39-A IC1211-6 4.7Vp-p 1V/20.0μ sec. cm COLOR CHART

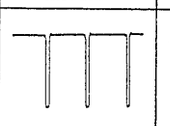

IC1211-7 4.3Vp-p 1V/20.0μ sec. cm COLOR CHART

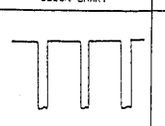

41-A IC1211-8 5.0Vp-p 1V/20.0μ sec. cm COLOR CHART

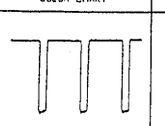

42-A IC1211-9 4.4Vp-p 1V/20.0μ sec. cm COLOR CHART

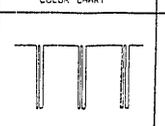

43-A IC1211-10 4.9Vp-p 1V/20.0μ sec. cm COLOR CHART

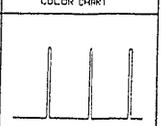

PROCESS (SENSOR DRIVE/PROCESS SECTION) SCHEMATIC

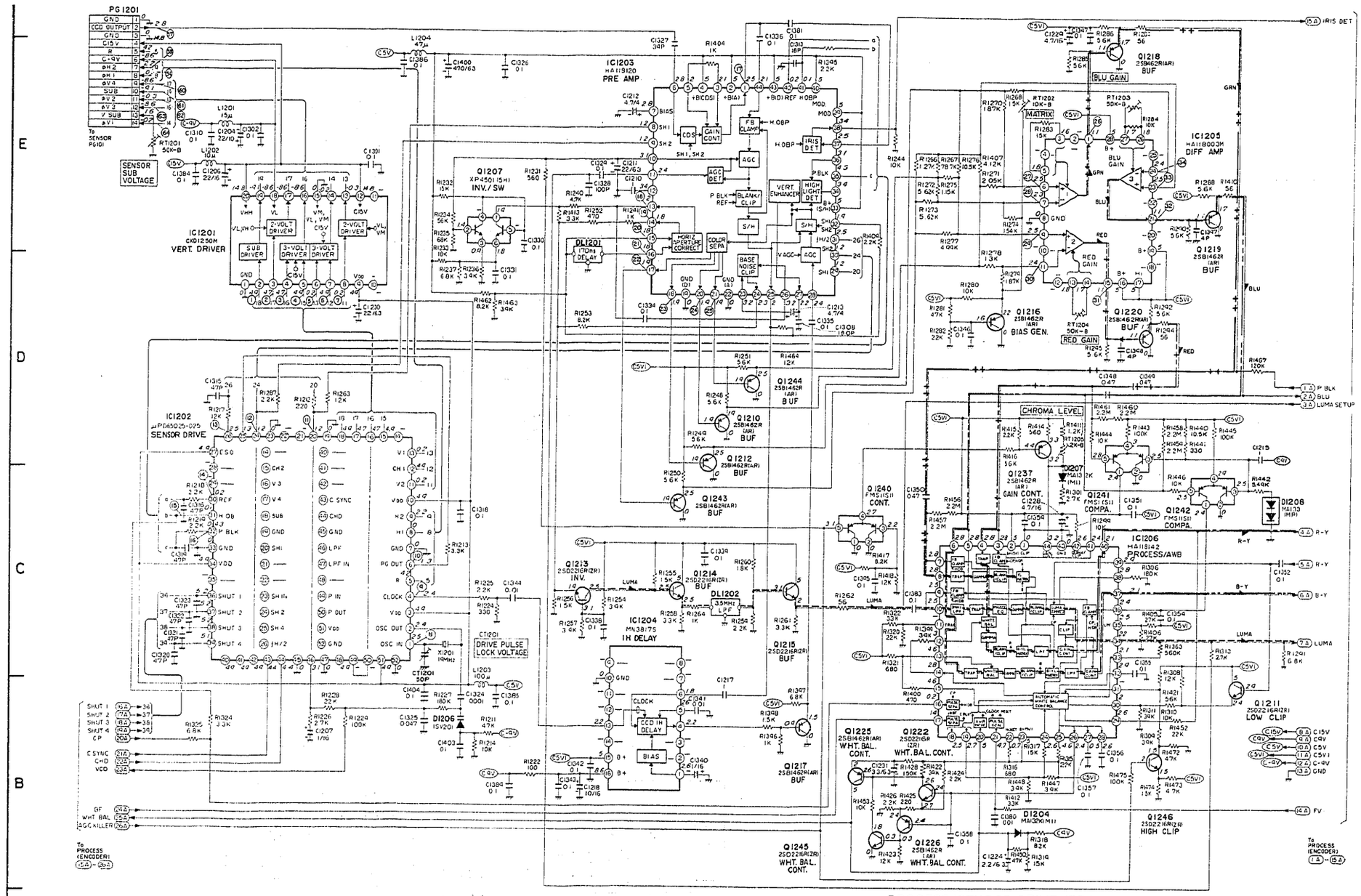

PROCESS (SENSOR DRIVE/PROCESS SECTION) P.C.B

SCHEMATIC TITLE	PAGE	SCHEMATIC TITLE	PAGE
CHROMA	5-25	PRE AMP	5-25
ENCODER	5-11	SERVO	5-23
ELECTRONIC VIEWFINDER	5-17	SUB SYSTEM CONTROL	5-15
FUSE	5-18	SYSTEM CONTROL	5-19
INDI	5-17	SENSOR	5-7
JACK	5-33	SENSOR DRIVE/PROCESS	5-9
LUMA	5-31	TROUBLE SENSOR	5-21
MOTOR DRIVE	5-22		

44-A IC1211-11 4.5Vp-p 1V/20.0μ sec.cm COLOR CHART

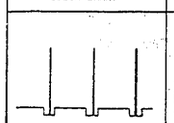

45-A IC1211-12 190mVp-p 50mV/20.0μ sec.cm COLOR CHART

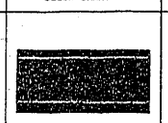

46-A IC1211-13 190mVp-p 50mV/20.0μ sec.cm COLOR CHART

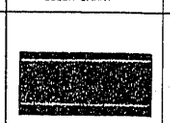

47-A IC1211-14 3.4Vp-p 1V/5.0msec.cm COLOR CHART

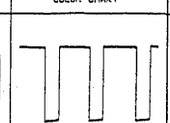

48-A IC1211-20 340mVp-p 0.1V/20.0μ sec.cm COLOR CHART

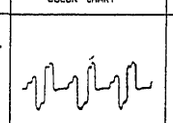

49-A IC1211-21 340mVp-p 0.1V/20.0μ sec.cm COLOR CHART

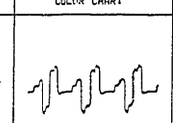

50-A IC1211-22 470mVp-p 0.1V/20.0μ sec.cm COLOR CHART

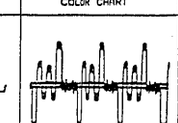

51-A IC1211-23 470mVp-p 0.1V/20.0μ sec.cm COLOR CHART

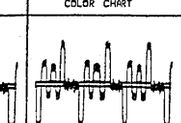

52-A IC1211-29 500mVp-p 0.1V/20.0μ sec.cm COLOR CHART

PROCESS (ENCODER SECTION) SCHEMATIC

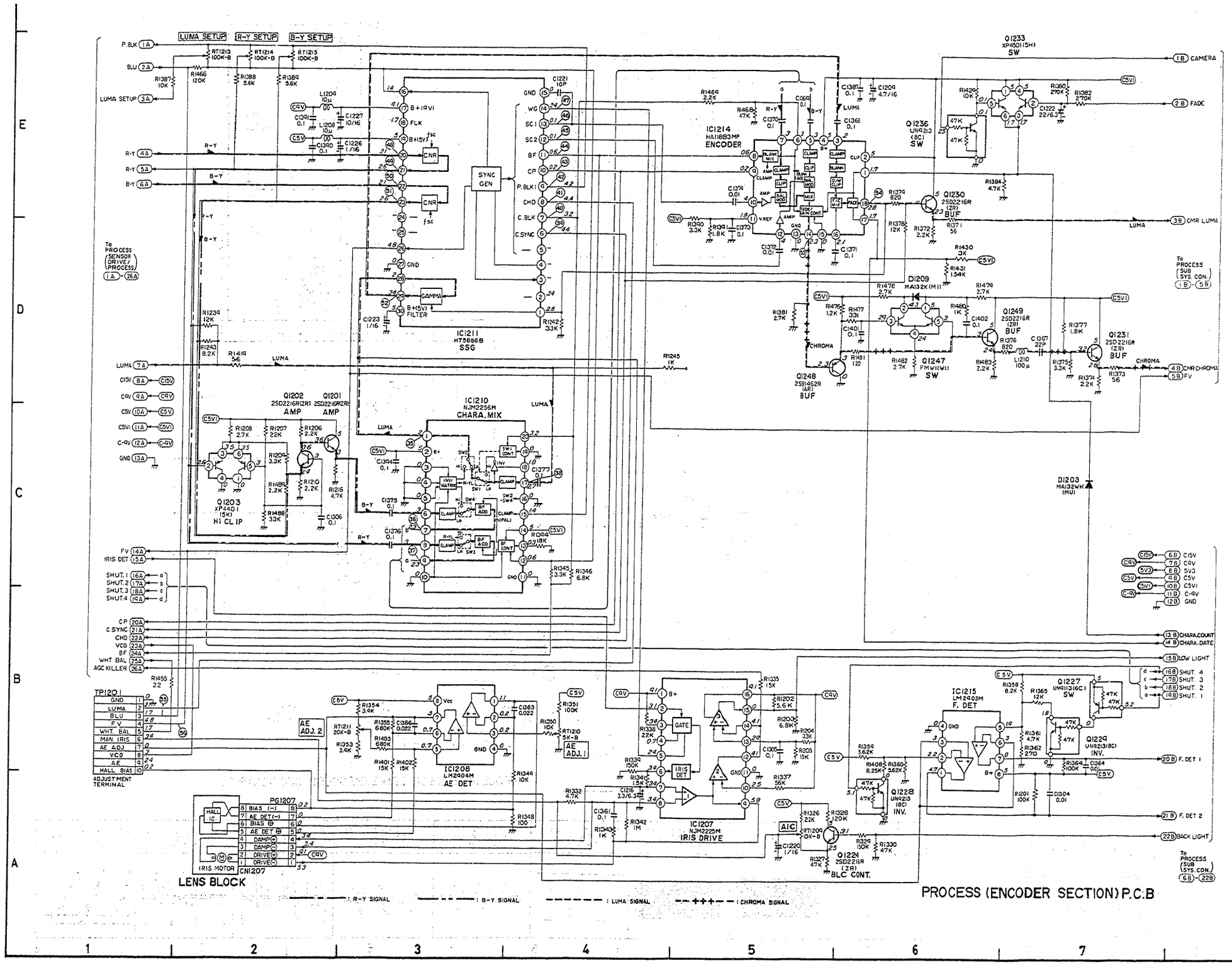

PROCESS CIRCUIT BOARD

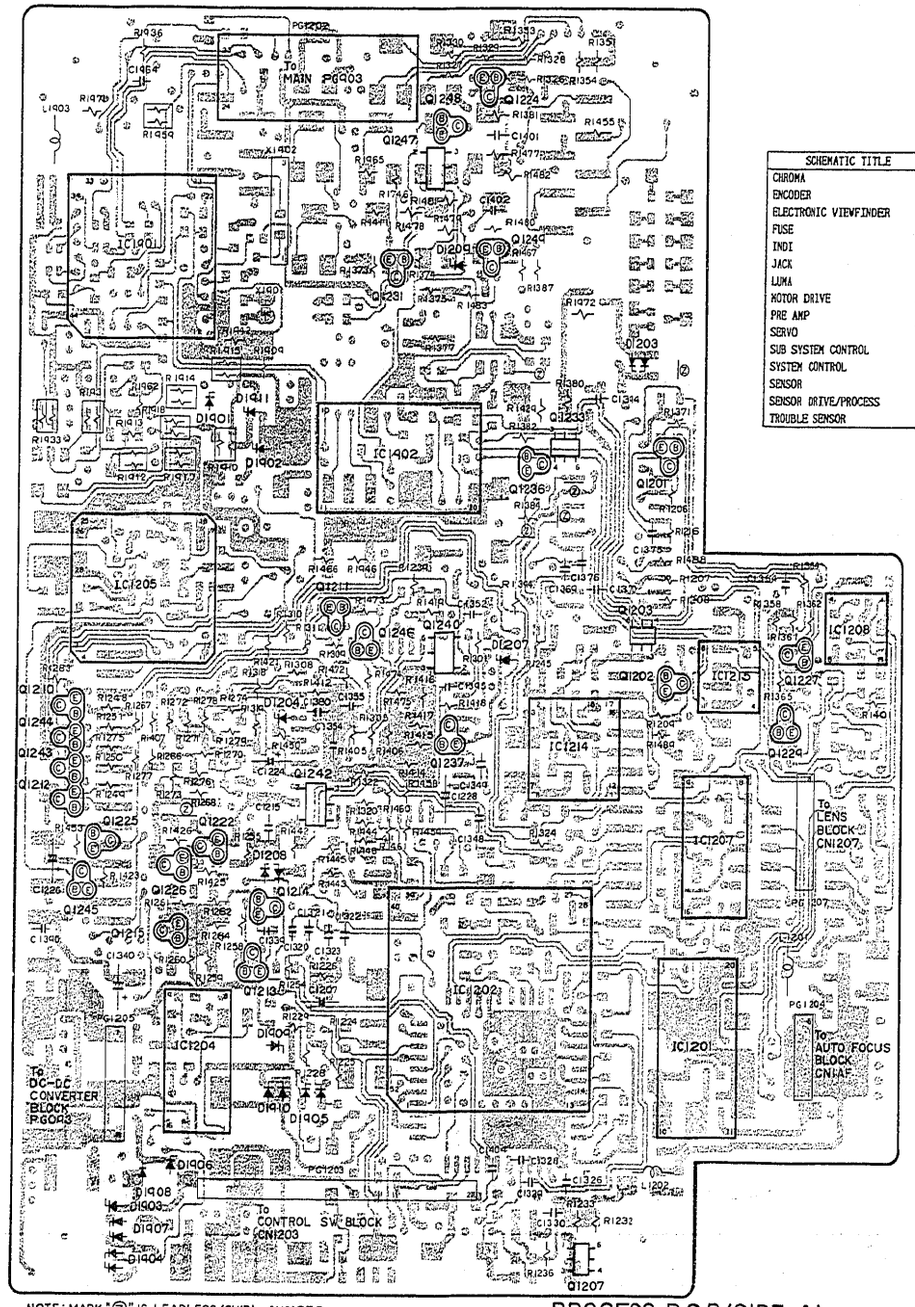

NOTE: MARK "②" IS LEADLESS (CHIP) JUMPER.

PROCESS P.C.B (SIDE A)

▒ : SIDE A

SCHEMATIC TITLE	PAGE
CHROMA	5-26
ENCODER	5-11
ELECTRONIC VIEWFINDER	5-17
FUSE	5-18
INDI	5-17
JACK	5-33
LUMA	5-31
MOTOR DRIVE	5-22
PRE AMP	5-25
SERVO	5-23
SUB SYSTEM CONTROL	5-15
SYSTEM CONTROL	5-19
SENSOR	5-7
SENSOR DRIVE/PROCESS	5-9
TROUBLE SENSOR	5-21

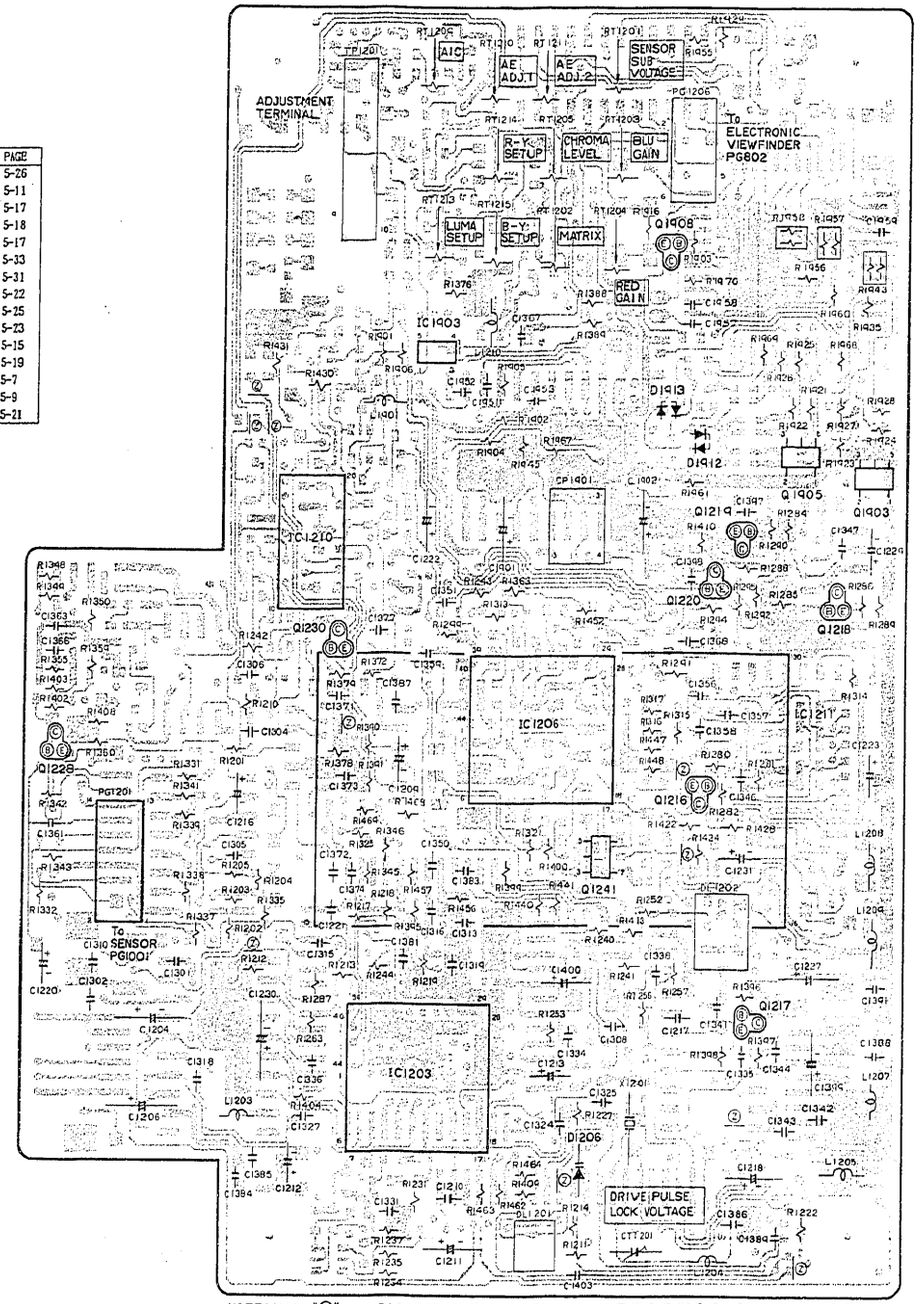

NOTE: MARK "②" IS LEADLESS (CHIP) JUMPER.

PROCESS P.C.B (SIDE B)

▒ : SIDE B

PROCESS (SUB SYSTEM CONTROL SECTION) SCHEMATIC

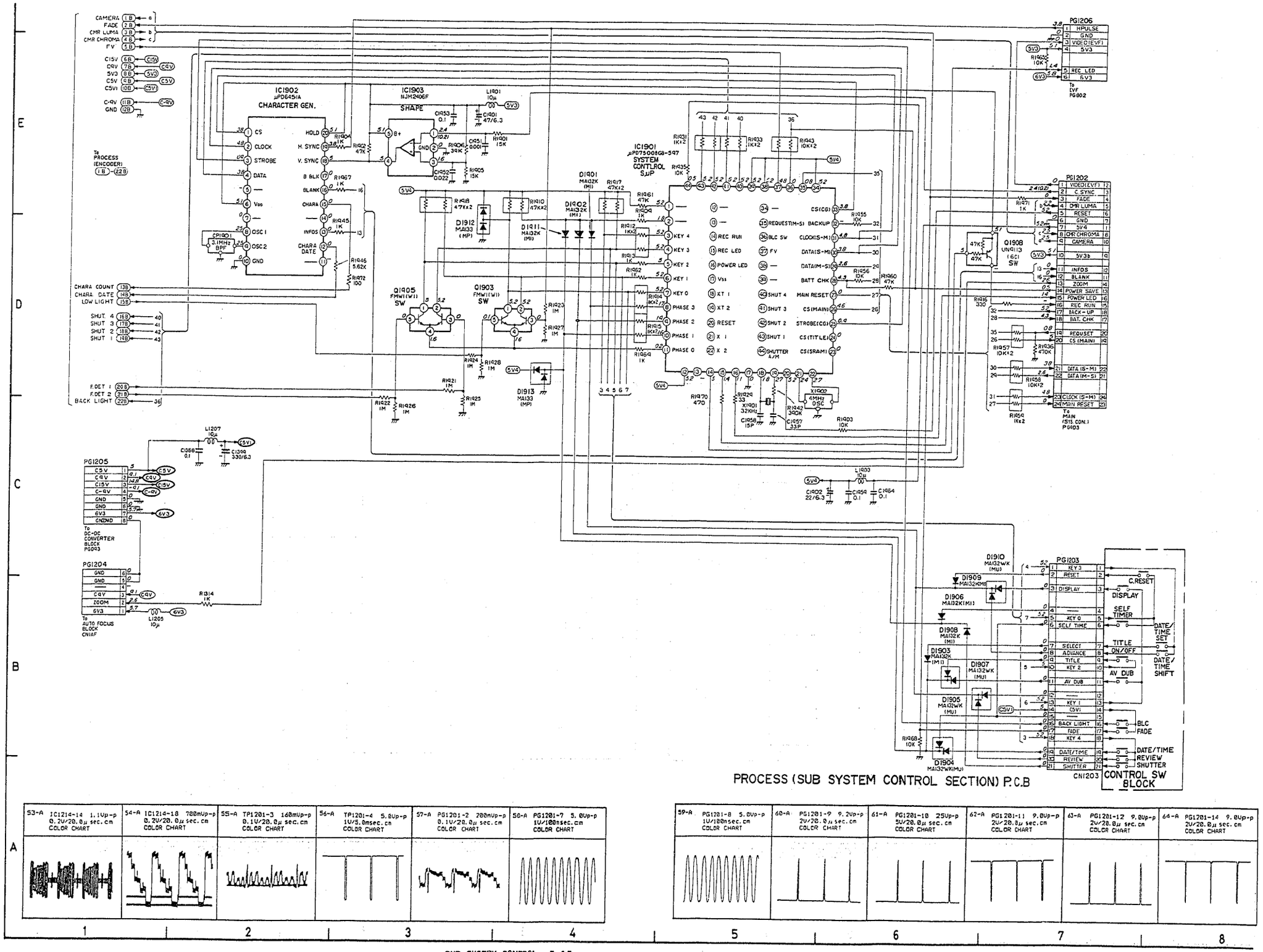

PROCESS (SUB SYSTEM CONTROL SECTION) P.C.B

ELECTRONIC VIEWFINDER (EVF)·INDI. SCHEMATIC

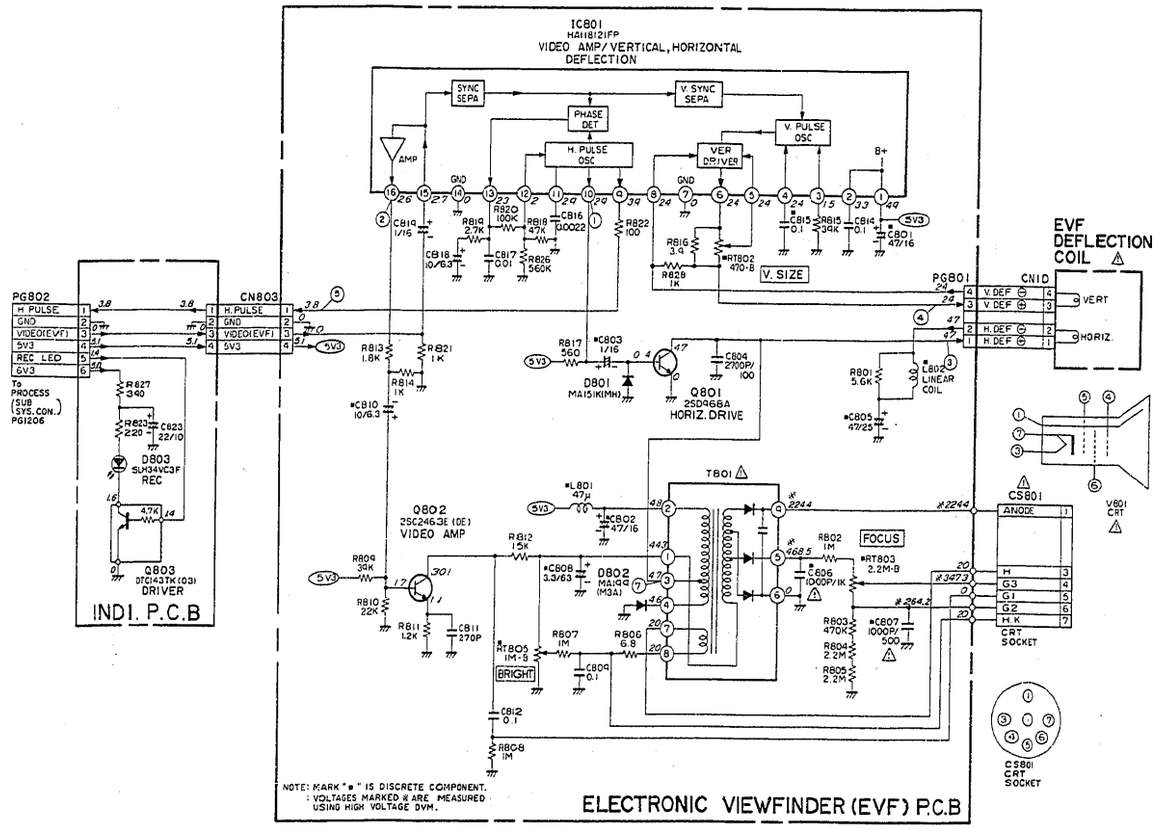

1-A IC801-10 1.7Vp-p 0.5V/20.0μ sec. cm COLOR CHART	2-A IC801-16 3.0Vp-p 1V/20.0μ sec. cm COLOR CHART	3-A PG801-1 85Vp-p 20V/20.0μ sec. cm COLOR CHART
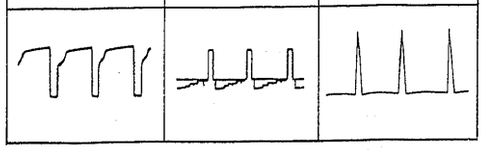		

ELECTRONIC VIEWFINDER (EVF)·INDI. CIRCUIT BOARD

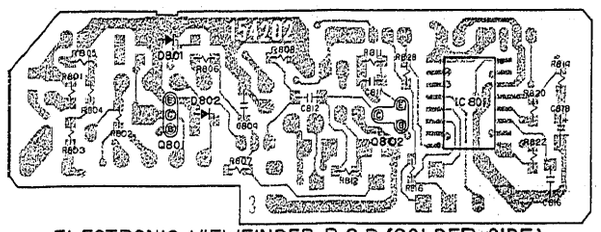

ELECTRONIC VIEWFINDER P.C.B (SOLDER SIDE)

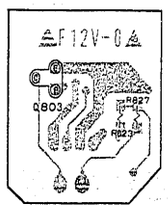

INDI. P.C.B

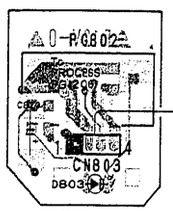

INDI. P.C.B

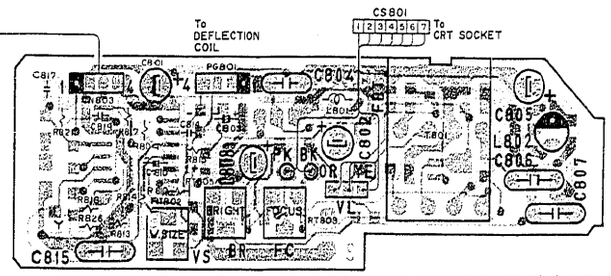

ELECTRONIC VIEWFINDER P.C.B (COMPONENT SIDE)

: SOLDER SIDE

: SOLDER SIDE
: COMPONENT SIDE

FUSE SCHEMATIC

SCHEMATIC TITLE	PAGE
CHROMA	5-26
ENCODER	5-11
ELECTRONIC VIEWFINDER	5-17
FUSE	5-18
INDI	5-17
JACK	5-33
LUMA	5-31
MOTOR DRIVE	5-22
PRE AMP	5-25
SERVO	5-23
SUB SYSTEM CONTROL	5-15
SYSTEM CONTROL	5-19
SENSOR	5-7
SENSOR DRIVE/PROCESS	5-9
TROUBLE SENSOR	5-21

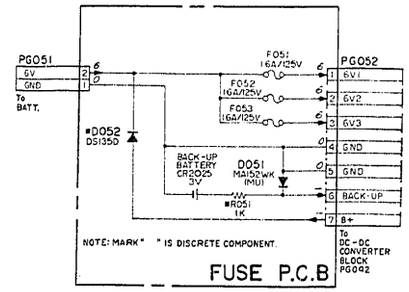

FUSE CIRCUIT BOARD

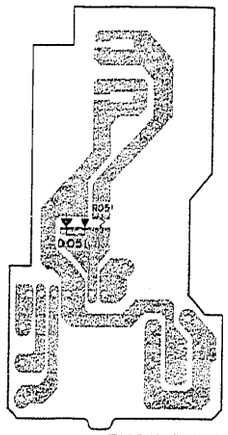

FUSE P.C.B
(SOLDER SIDE)

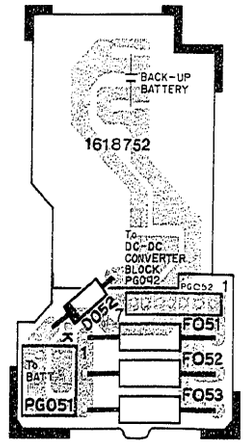

FUSE P.C.B
(COMPONENT SIDE)

MAIN (SYSTEM CONTROL SECTION) SCHEMATIC

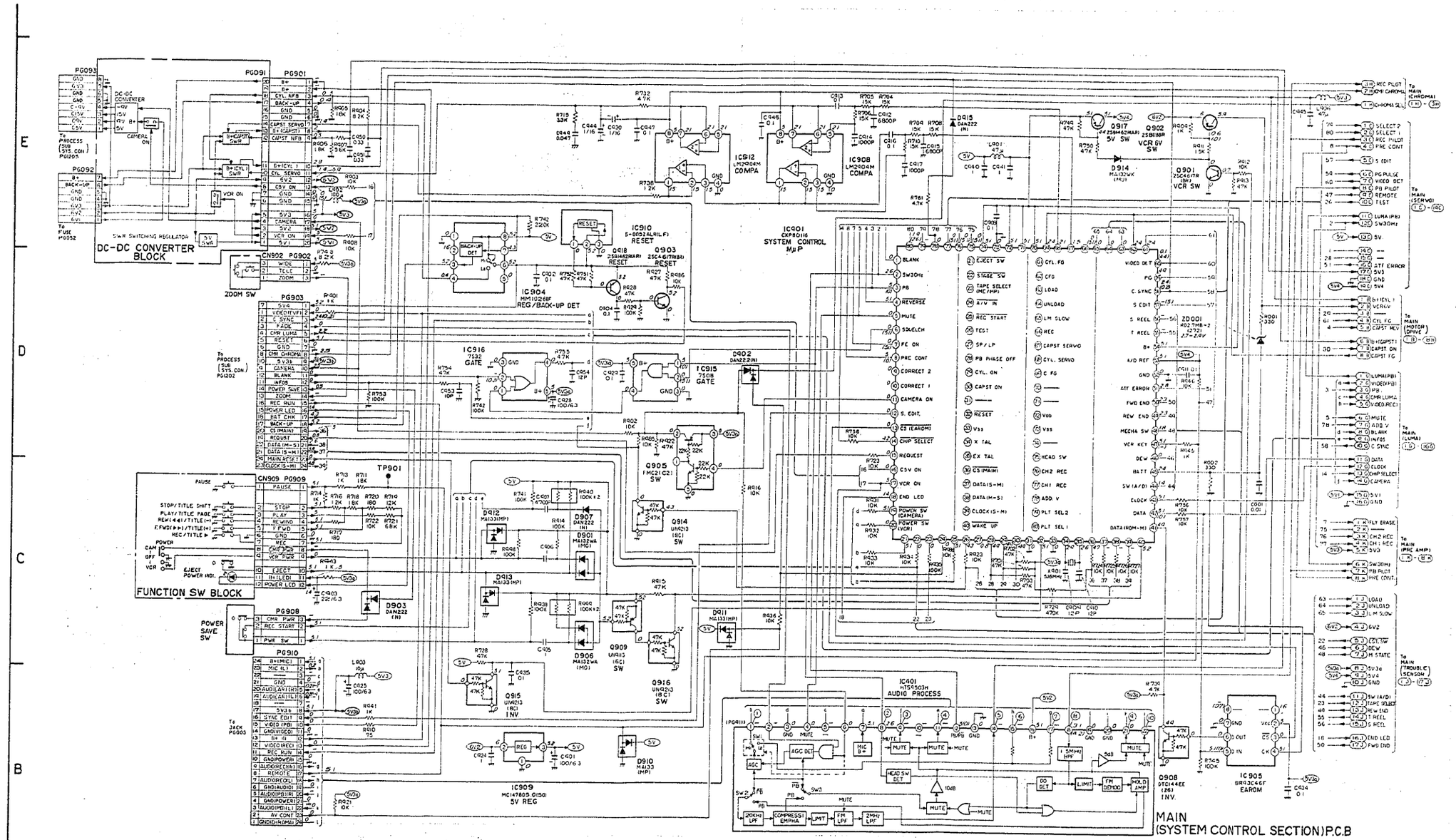

SCHEMATIC TITLE	PAGE	SCHEMATIC TITLE	PAGE
CHROMA	5-26	PRE AMP	5-25
ENCODER	5-11	SERVO	5-23
ELECTRONIC VIEWFINDER	5-17	SUB SYSTEM CONTROL	5-15
FUSE	5-18	SYSTEM CONTROL	5-19
INDI	5-17	SENSOR	5-7
JACK	5-33	SENSOR DRIVE/PROCESS	5-9
LUMA	5-31	TROUBLE SENSOR	5-21
MOTOR DRIVE	5-22		

MAIN (TROUBLE SENSOR SECTION) SCHEMATIC

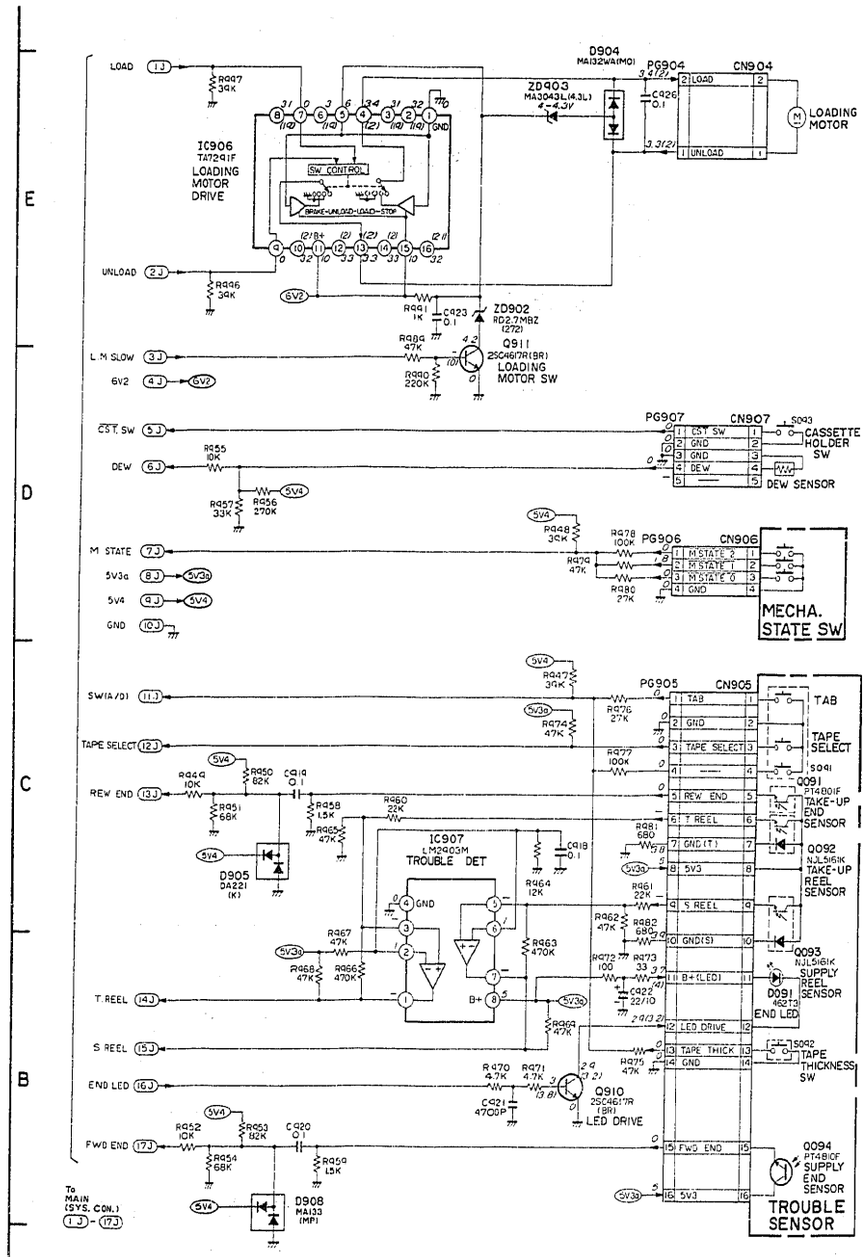

MAIN (TROUBLE SENSOR SECTION) P.C.B

MAIN (MOTOR DRIVE SECTION) SCHEMATIC

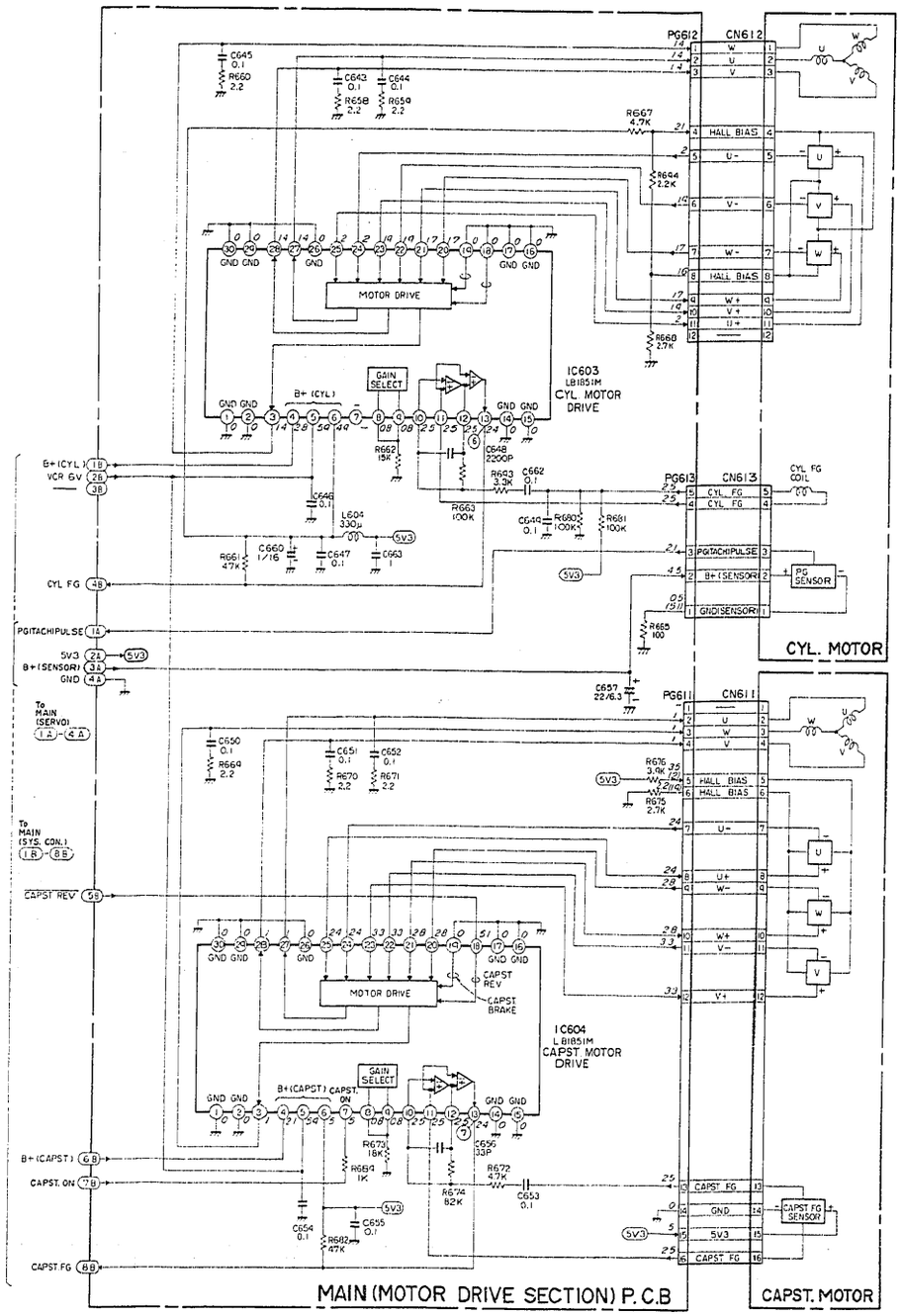

MAIN (MOTOR DRIVE SECTION) P.C.B

MAIN (SERVO SECTION) SCHEMATIC

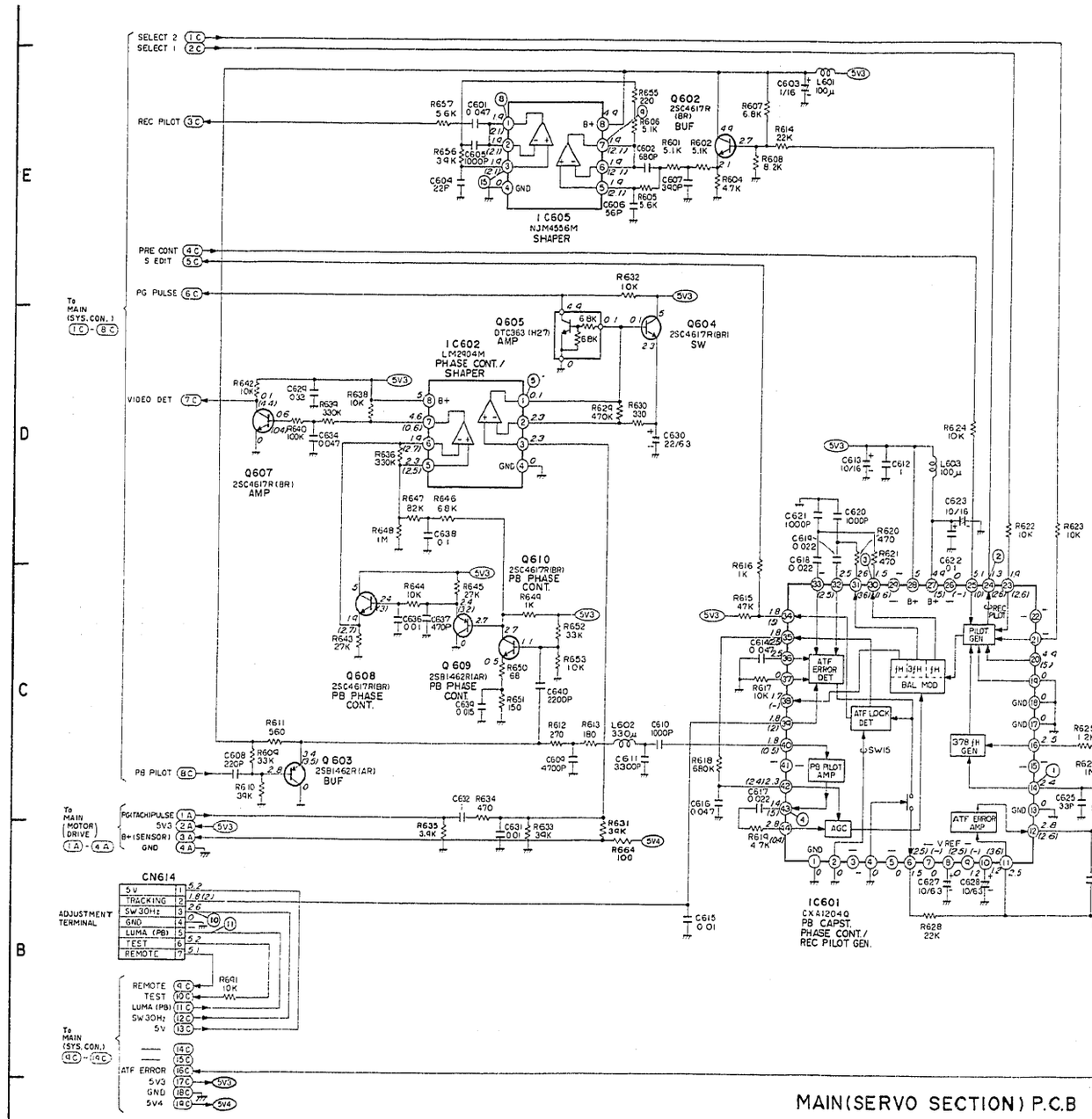

MAIN(SERVO SECTION) P.C.B

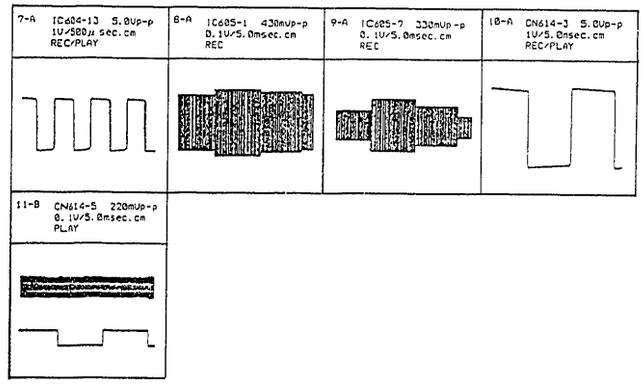

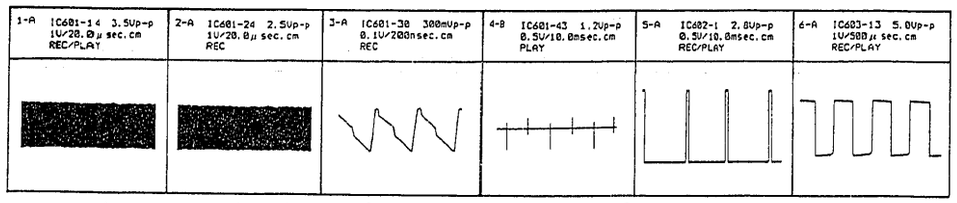

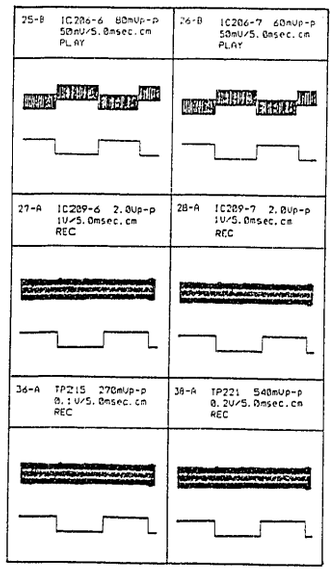

SCHEMATIC TITLE	PAGE	SCHEMATIC TITLE	PAGE
CHROMA	5-26	PRE AMP	5-25
ENCODER	5-11	SERVO	5-23
ELECTRONIC VIEWFINDER	5-17	SUB SYSTEM CONTROL	5-15
FUSE	5-18	SYSTEM CONTROL	5-19
INDI	5-17	SENSOR	5-7
JACK	5-33	SENSOR DRIVE/PROCESS	5-9
LUMA	5-31	TROUBLE SENSOR	5-21
MOTOR DRIVE	5-22		

MAIN (PRE AMP SECTION) SCHEMATIC

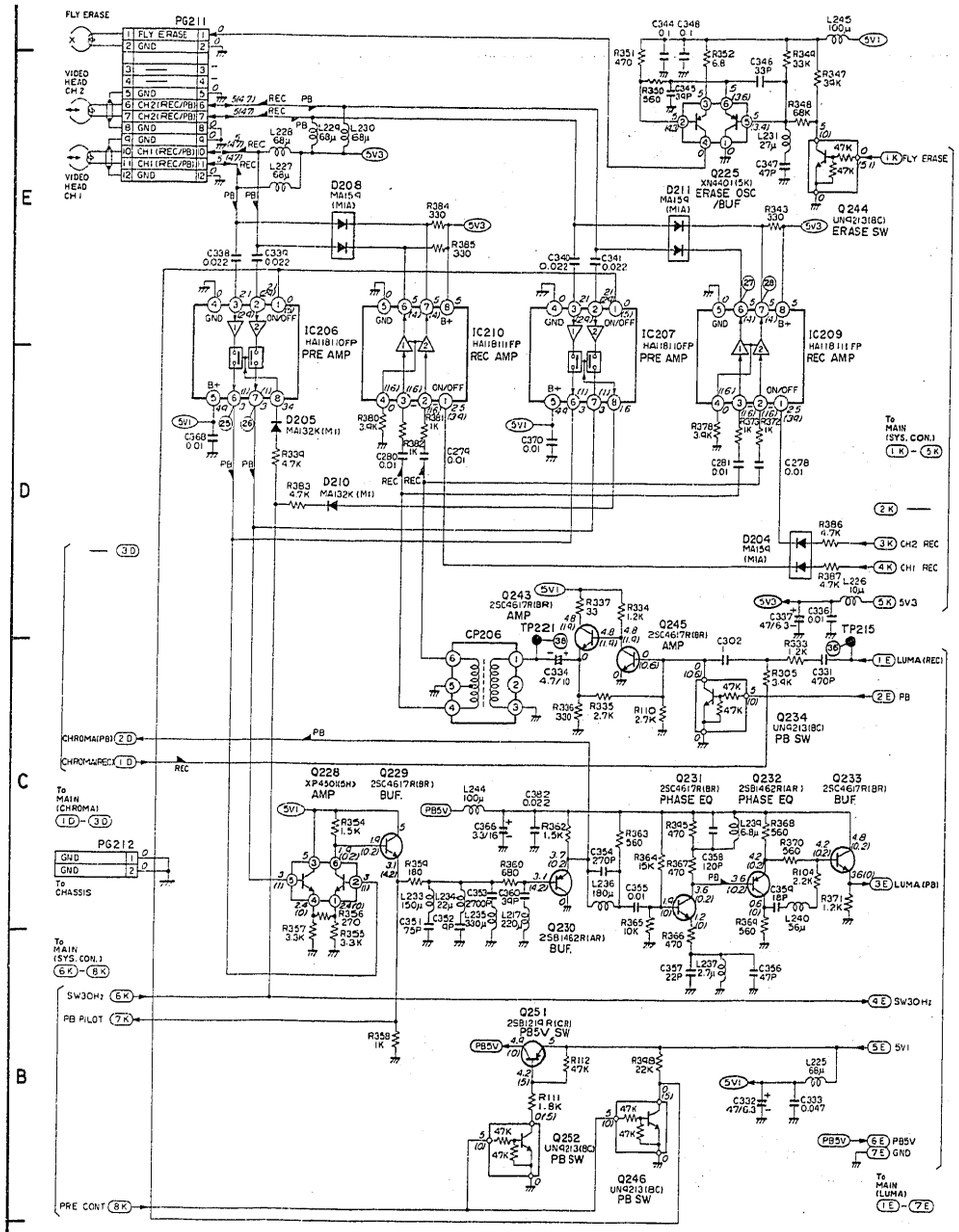

MAIN (PRE AMP SECTION) P.C.B

MAIN (CHROMA SECTION) SCHEMATIC

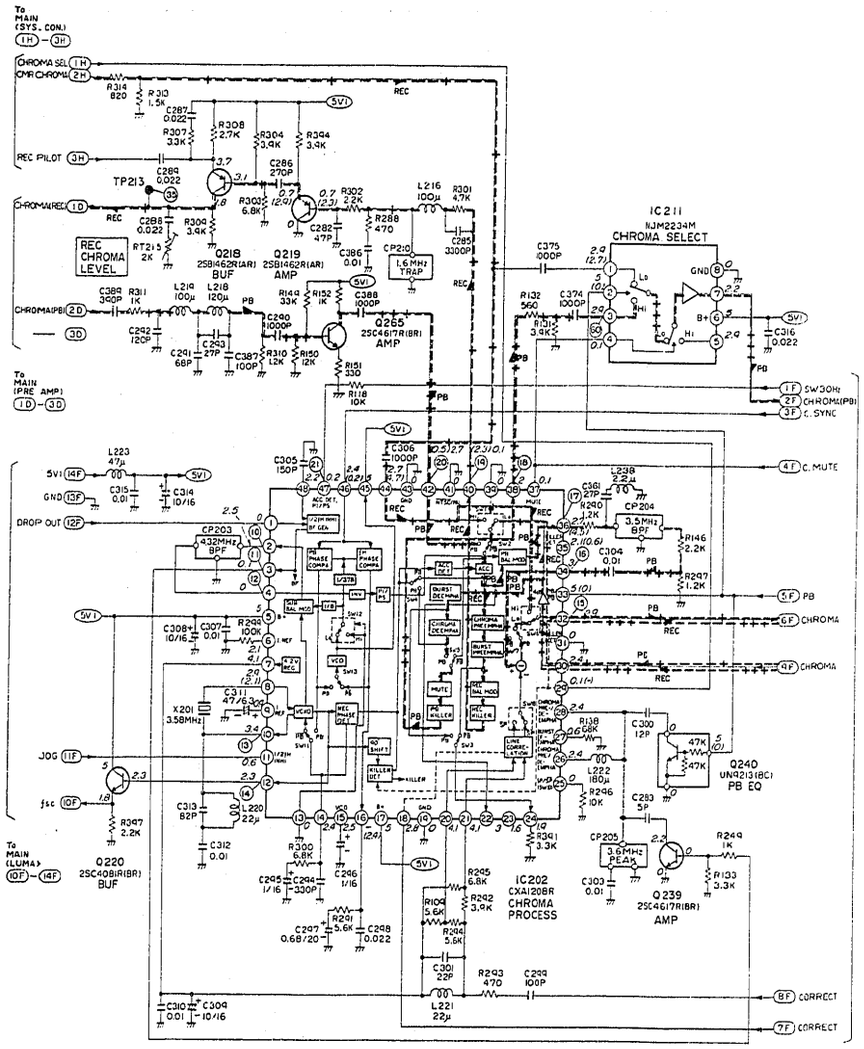

MAIN (CHROMA SECTION) P.C.B

— — + — — : REC CHROMA SIGNAL — — + + + — — : PB CHROMA SIGNAL

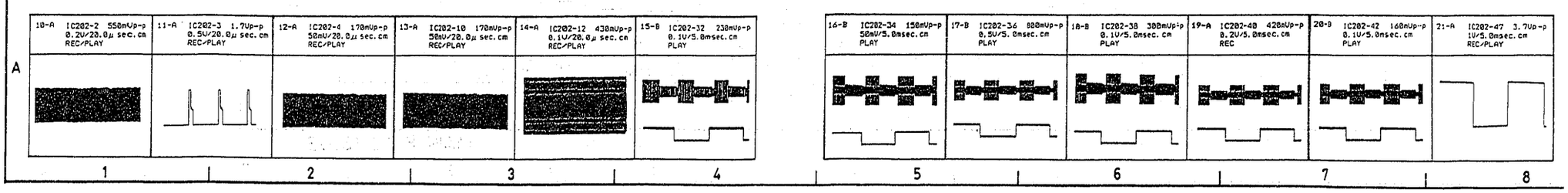

MAIN CIRCUIT BOARD (SIDE A)

: SIDE A

NOTE:SOLDER SEMI-VARIABLE RESISTORS TO THE COMPONENTS MARKED x WHEN ADJUSTING THEM

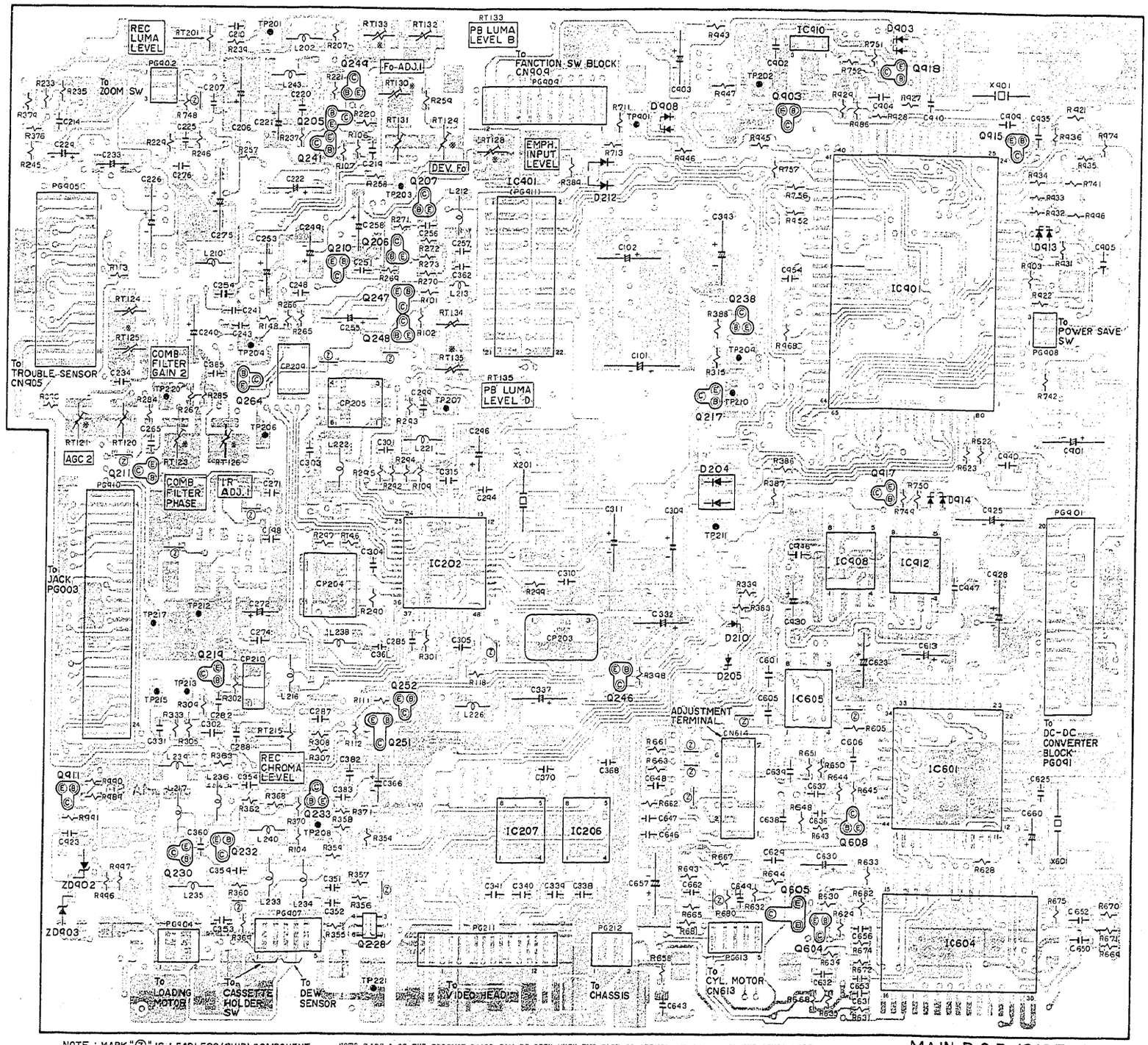

NOTE : MARK "Ⓩ" IS LEADLESS(CHIP) COMPONENT.

NOTE:SIDE A OF THE CIRCUIT BOARD CAN BE SEEN WHEN THE CASE IS OPENED AND SIDE B IS THE OTHER SIDE

MAIN P.C.B (SIDE A)

MAIN CIRCUIT BOARD [SIDE B]

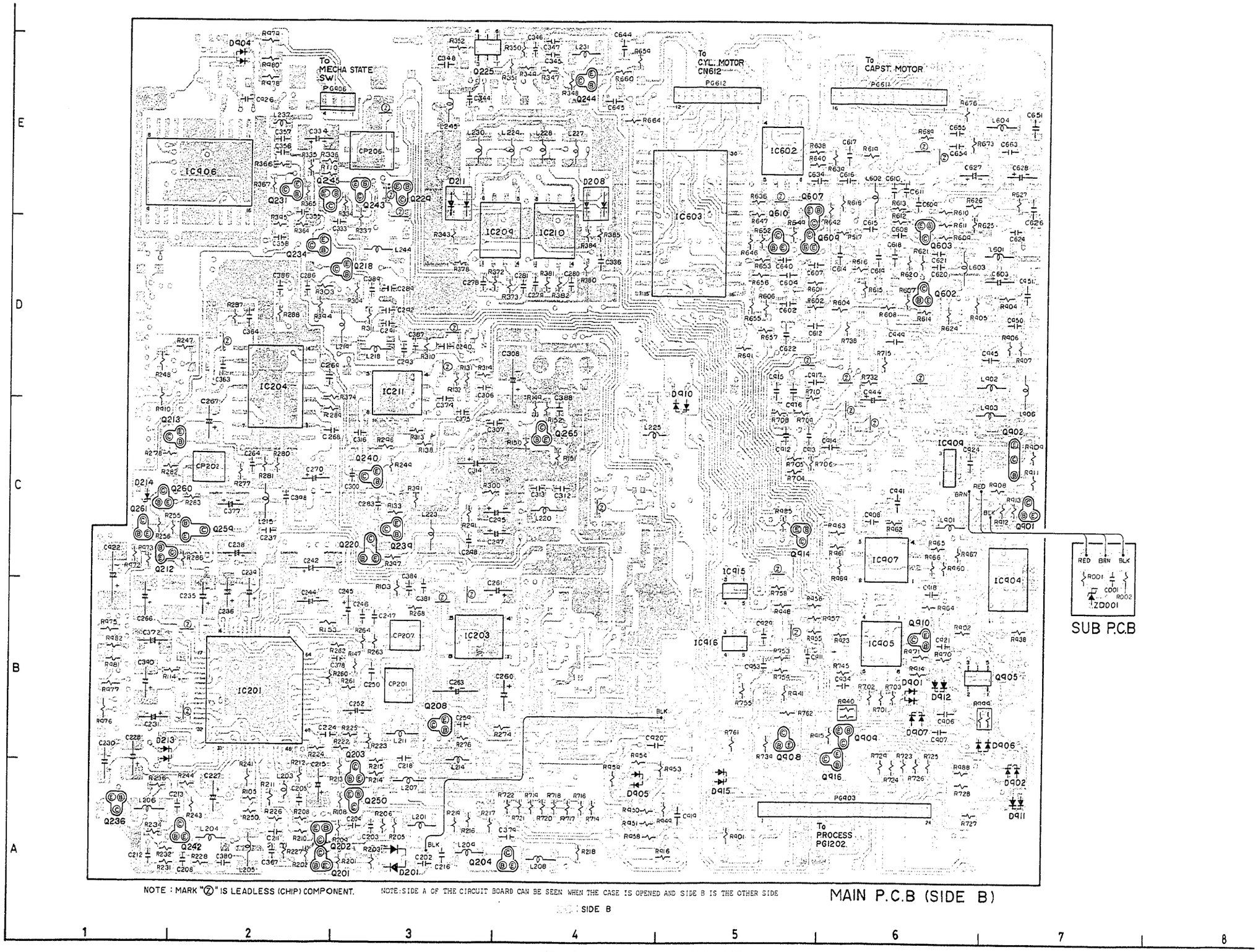

NOTE : MARK "Ⓩ" IS LEADLESS (CHIP) COMPONENT.

NOTE: SIDE A OF THE CIRCUIT BOARD CAN BE SEEN WHEN THE CASE IS OPENED AND SIDE B IS THE OTHER SIDE

: SIDE B

MAIN P.C.B (SIDE B)

MAIN (LUMA SECTION) SCHEMATIC

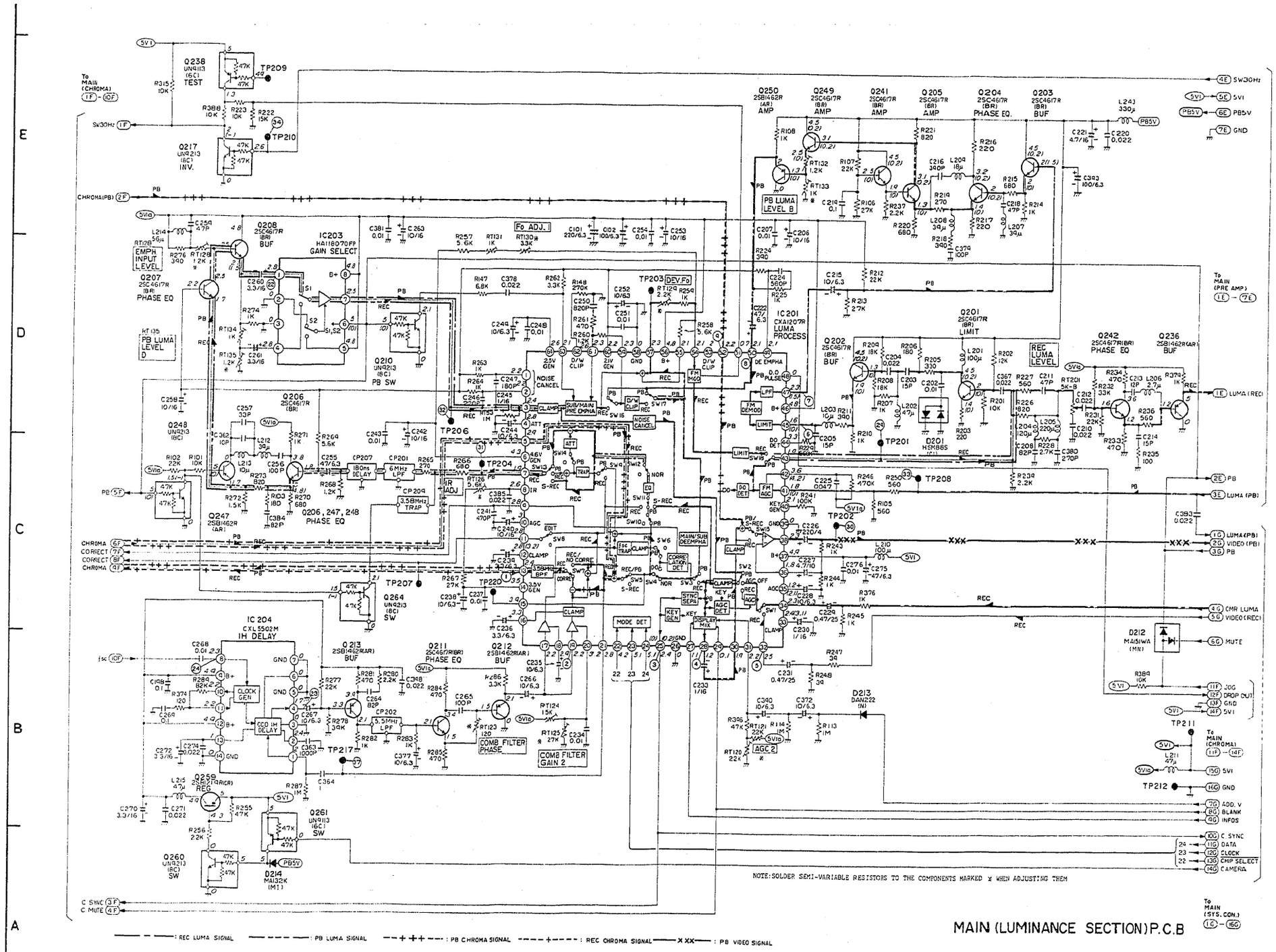

MAIN (LUMINANCE SECTION) P.C.B

JACK SCHEMATIC

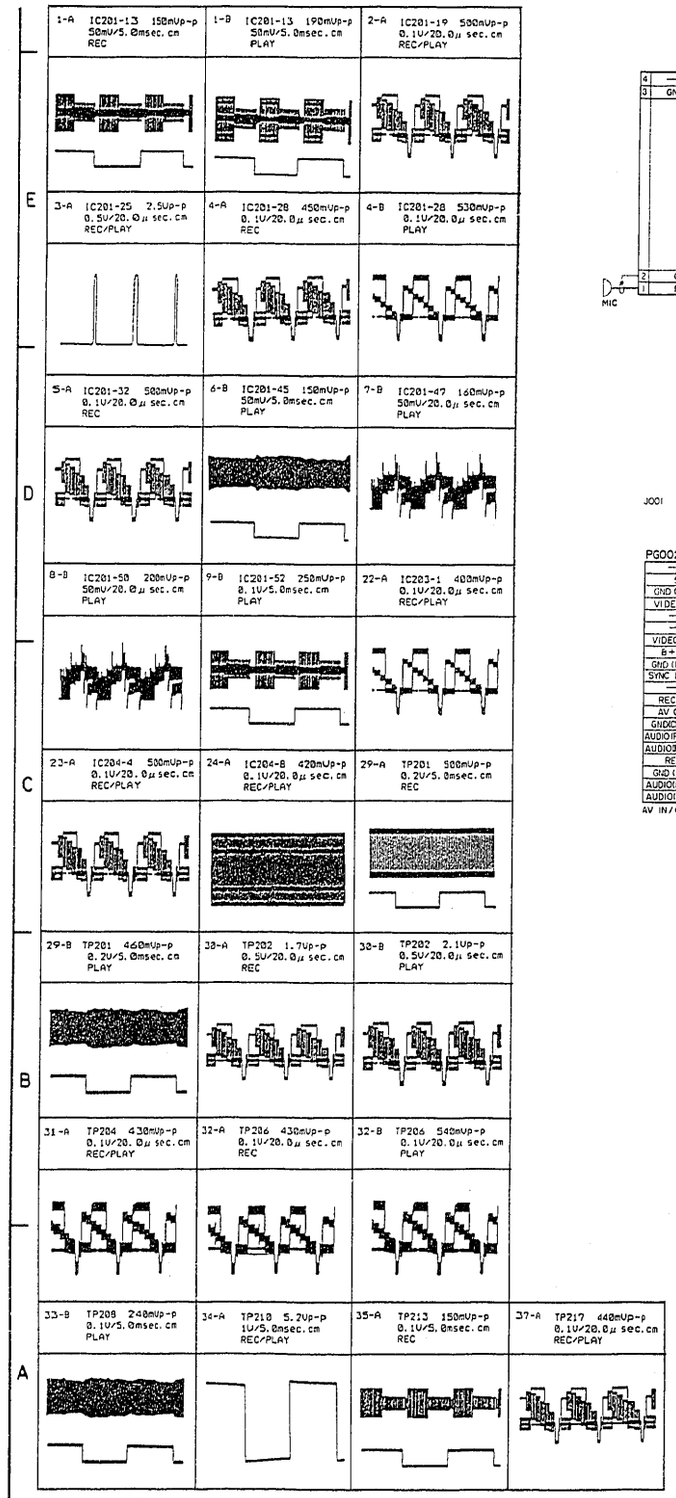

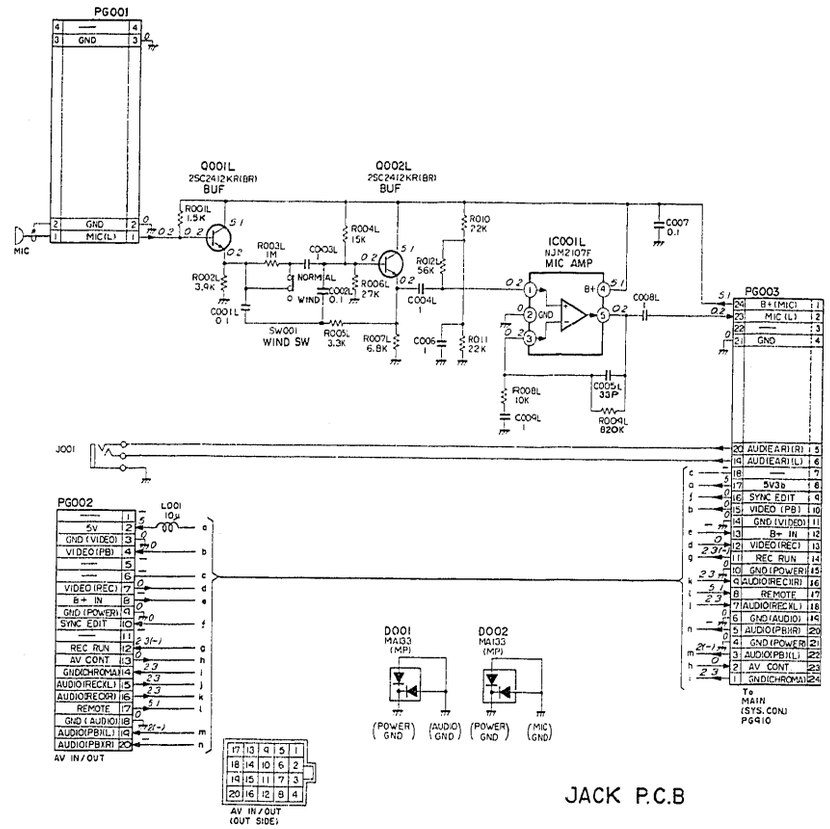

JACK P.C.B

JACK CIRCUIT BOARD

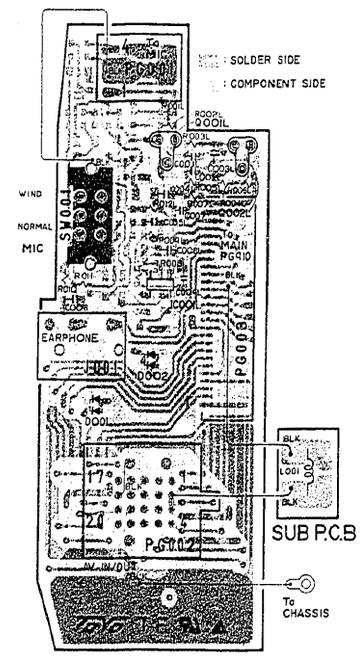

SUB P.C.B

JACK P.C.B

SCHEMATIC TITLE	PAGE	SCHEMATIC TITLE	PAGE
CHROMA	5-26	PRE AMP	5-25
ENCODER	5-11	SERVO	5-23
ELECTRONIC VIEWFINDER	5-17	SUB SYSTEM CONTROL	5-15
FUSE	5-18	SYSTEM CONTROL	5-19
INDI	5-17	SENSOR	5-7
JACK	5-33	SENSOR DRIVE/PROCESS	5-9
LUMA	5-31	TROUBLE SENSOR	5-21
MOTOR DRIVE	5-22		

CHAPTER 6 EXPLODED VIEWS

CABINET SECTION

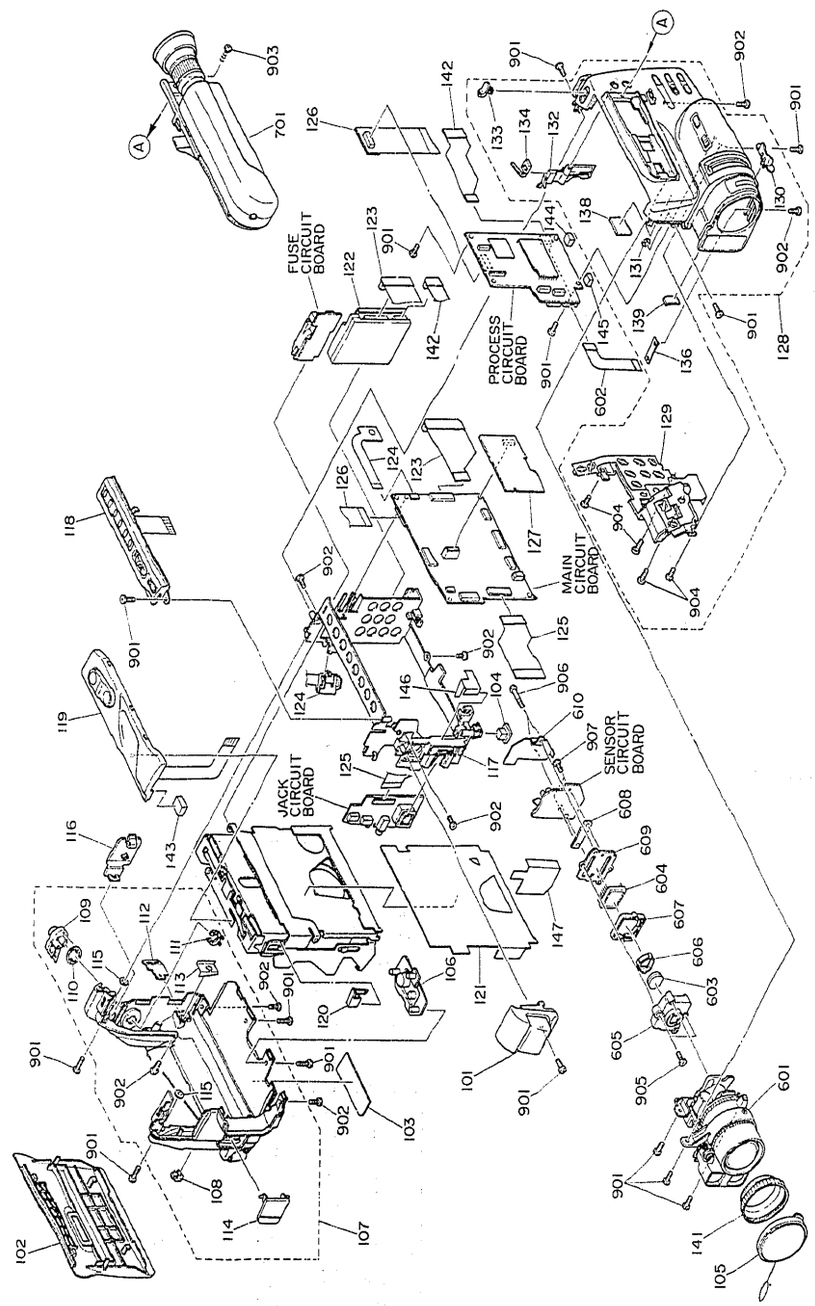

MAIN CHASSIS SECTION

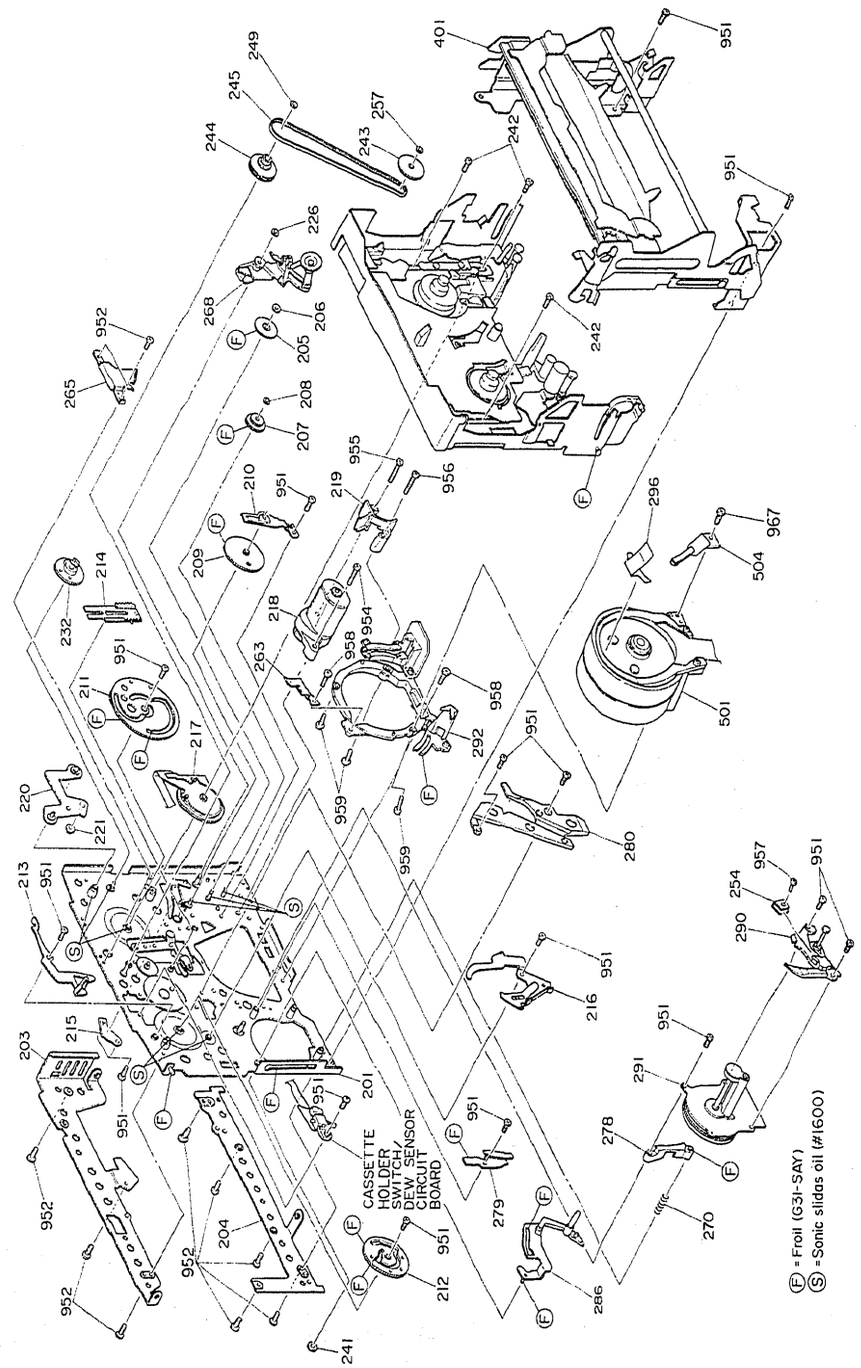

SUB CHASSIS SECTION

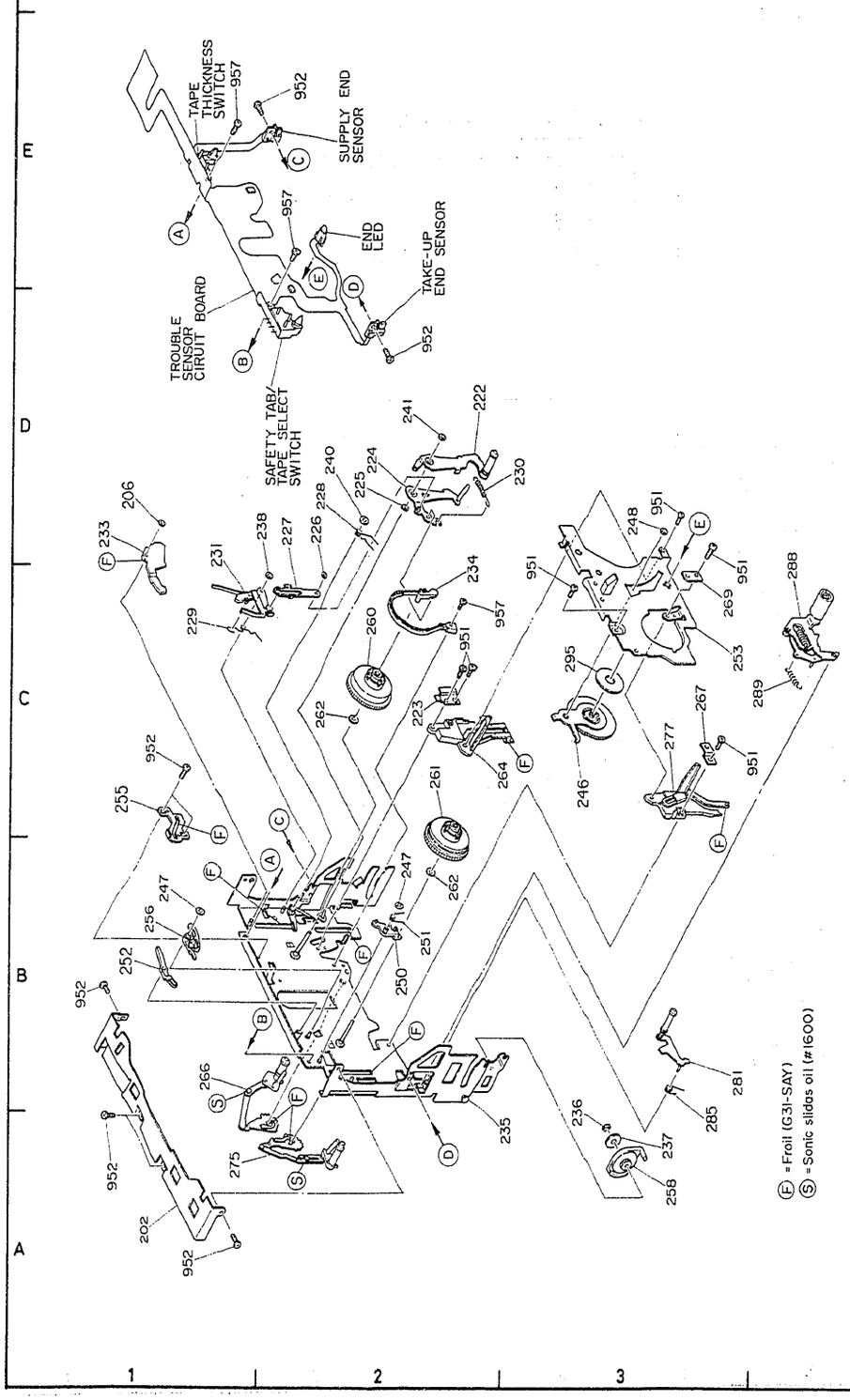

ELECTRONIC VIEWFINDER (EVF) SECTION

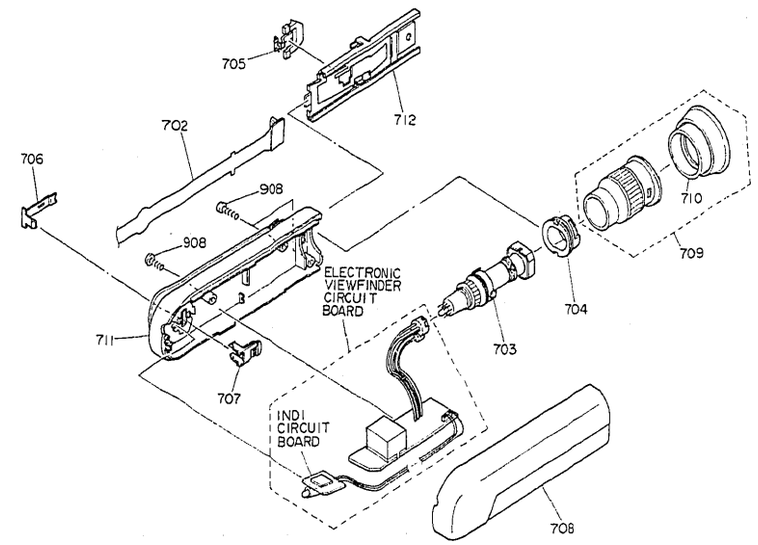

LENS SECTION

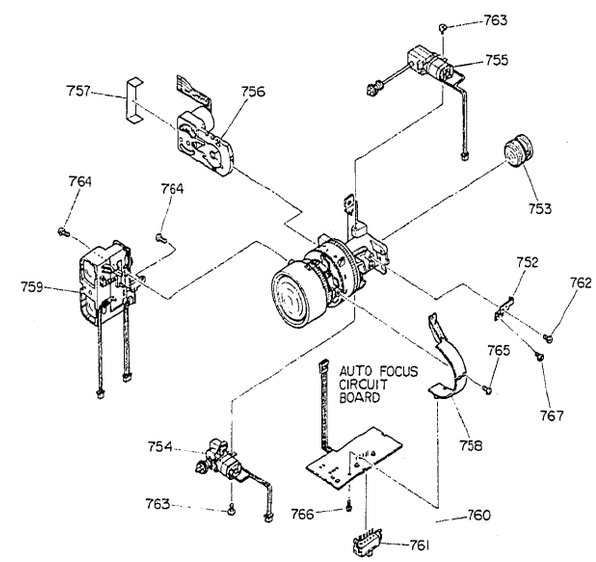

LUBLICATION

Lubrication points are shown in the exploded view diagrams by marks (Ⓢ, Ⓕ).

Lubricants shown in the diagram are as follows.

Ⓢ Sonic slider oil (#1600)

Ⓕ Froil (G31-SAY)

USED SCREW

SYMBOL No.	CONFIGURATION (COLOUR)	DIMENSION (mm)
242	(BLACK)	P 2×1.4
762	(BLACK)	PT 3×1.6
763	(SILVER)	SPECIAL
764	(BLACK)	PT 4×1.6
765	(BLACK)	PT 4×1.6
766	(BLACK)	SPECIAL
767	(BLACK)	SPECIAL
901	(BLACK)	BT 2×6
902	(BLACK)	B 2×3
903	(BLACK)	FT 2×6
904	(SILVER)	BT 2×6
905	(BLACK)	B 2×7
906	(SILVER)	BT 2×14
907		SPECIAL
908	(BLACK)	BT 1.7×5
951	(SILVER)	P 1.4×2
952	(BLACK)	P 1.4×1.6
954	(SILVER)	P 1.4×6
955		P 1.4×12
956		P 1.7×12
957		P 1.4×2.5
958	(SILVER)	P 2×3
959	(SILVER)	P 2×4
961	(BLACK)	F 1.4×2.2
965		SPECIAL (2×4)

SYMBOL No.	CONFIGURATION (COLOUR)	DIMENSION (mm)
966	(BLACK)	P 1.7×4
967	(BLACK)	P 2×4

USED WASHER

SYMBOL No.	CONFIGURATION	DIMENSION (mm)
206		O.D. : 3.0 I.D. : 1.2 t : 0.25
208		O.D. : 3.6 I.D. : 1.2 t : 0.25
225		O.D. : 3.2 I.D. : 1.35 t : 0.13
226		O.D. : 3.2 I.D. : 1.2 t : 0.25
238		O.D. : 3.6 I.D. : 1.2 t : 0.13
240		O.D. : 4.0 I.D. : 1.7 t : 0.25
241		O.D. : 2.5 I.D. : 0.8 t : 0.13
247		O.D. : 3.6 I.D. : 1.0 t : 0.25
248		O.D. : 1.8 I.D. : 0.8 t : 0.13
249		O.D. : 2.5 I.D. : 1.0 t : 0.25
257		O.D. : 2.5 I.D. : 0.8 t : 0.25
262		O.D. : 5.0 I.D. : 2.35 t : 0.25
293		O.D. : 3.6 I.D. : 1.4 t : 0.25

SCREW CLASSIFICATION

Example : BT3 × 6

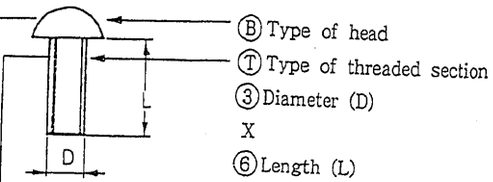

Abbre-viation	Name	Shape
No symbol	Brazier head	
P	Pan head	
B	Binding head	
O	Oval countersunk head	
F	Flat countersunk head	

Abbre-viation	Name	Shape
No symbol	Machine (clamps without tapping)	
t	Tapping (clamps with tapping) Type 1	
T	Tapping (clamps with tapping) Type 2	
f	Forming tight (for metal)	

Note Since the forming tight screw tightens while self tapping machine screws can be replaced by tapping screws.

WASHER CLASSIFICATION

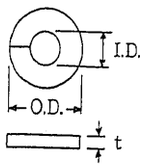

CHAPTER 7 REPLACEMENT PARTS LIST

SYMBOL-NO	P-NO	DISCRIPTION
MECHANISM SECTION		
101	5422491	MICROPHONE
102	4730023	DOOR
104	6594051	CAP
105	6443551	CAP
106	6443064	HOLDER, TRIPOD
107	4711143	CASE (R)
108	4750311	KNOB
109	4750517	KNOB
110	6528752	SPRING
111	6810791	HOLDER, KNOB
112	7797031	BRACKET
113	4341251	SPACER
114	6487511	CAP, CONNECTOR
115	7675881	CUSHION
116	6487482	COVER, BATTERY
117	6185415	FRAME
118	5617201	CONT UNIT
119	5617211	T/W UNIT
120	6810901	HOLDER, FLEXIBLE
121	4341444	SPACER
122	4132364	DC-DC CONVERTER
123	4132201	CONNECTOR, DCS FLEXIBLE
124	5617151	TRIG UNIT
125	1590411	CONNECTOR, IDS FLEXIBLE
126	4132191	CONNECTOR, CV FLEXIBLE
127	1379087	PWB ASSY HTS9503F
128	4711871	CASE(L)
129	5617221	PROGRAM SWITCH UNIT
130	4750621	KNOB, AF
131	7675881	CUSHION
132	6407862	LEVER
133	4750291	KNOB, EJECT
134	6810801	HOLDER, LOCK
136	7418791	NUT
138	7675781	CUSHION
139	7675782	CUSHION
141	6443072	HOOD, LENS
142	4132211	CONNECTOR, DCC FLEXIBLE
143	7675922	CUSHION
144	6563622	CUSHION
145	6563623	CUSHION
146	6529151	SPRING
147	4342371	SPACER
202	7473853	HOLDER
203	7473791	BRACKET
204	7473803	BRACKET
205	6347851	GEAR
206	7786213	WASHER
207	6347862	GEAR
208	7784687	WASHER
209	6916383	GEAR
210	7472721	HOLDER, GEAR
211	6347873	GEAR
212	6347881	GEAR
213	7471993	ARM
214	7472022	LUCK
215	7474792	PLATE
216	7472005	ARM, OPERATION
217	5610861	SWITCH, MODE
218	5579301	MOTOR, LOADING
219	6822651	GUIDE
220	7471973	SLIDER
221	4522771	ROLLER

SYMBOL-NO	P-NO	DISCRIPTION
222	7472606	ARM
223	7472733	STOPPER, BAND
224	7472513	ARM
225	4340244	WASHER
226	7787571	WASHER
227	7472892	ARM
228	6552663	SPRING
229	6556433	SPRING
230	6556444	SPRING
231	7472684	ARM
232	6440371	CAM, BRAKE
233	6821272	BRAKE
234	7472711	BAND, TENTION
235	7139021	CHASSIS SUB
236	7774942	E RING
237	6526581	SPRING
238	4340248	WASHER
240	4340249	WASHER
241	4340245	WASHER
242	4523783	SCREW
243	6440362	GEAR
244	6440341	GEAR
245	6359041	BELT
246	7795522	IDLER
247	4340243	WASHER
248	4340242	WASHER
249	7787573	WASHER
250	6821183	ARM
251	6552652	SPRING
252	6821263	ARM
253	7474813	PLATE
254	7474971	BRACKET
255	7472471	STOPPER
256	6821233	ARM
257	4340241	WASHER
258	6821284	DUMPER
260	6416321	REEL, SUPPLY
261	6416323	REEL, TAKE-UP
262	7786621	POLYSLIDER WASHER
263	6528982	PLATE
264	6821332	RAIL, GUIDE
265	7473363	HOLDER, ARM
266	6916691	BASE, GUIDE ROLLER (I)
267	4580121	SPACER
268	6916621	ARM
269	4580301	HOLDER, REEL
270	6524081	SPRING
275	6916701	BASE, GUIDE ROLLER (O)
277	6821076	PLATE, GUIDE
278	6821094	RAIL
279	6821104	RAIL
280	6821111	COVER, BELT
281	7472216	ARM
285	6552625	SPRING
286	7472241	ARM
288	7472975	PRESSER ROLLER
289	6556731	SPRING
290	6821085	BASE OPERATION
291	5571861	MOTOR, CAPSTAN
292	6916641	BASE, CYLINDER
295	4342071	SHEET, COVER
296	4741772	BRACKET
401	7472464	CASSETTE HOLDER ASSY
501	5436475	CYLINDER ASSY
504	5793831	BRUSH

SYMBOL-NO	P-NO	DISCRIPTION
601	6960543	LENS, ZOOM
602	1590372	CONNECTOR, AF FLEXIBLE
603	5783191	FILTER
604	5318282	CCD IMAGE DEVICE ICX026BK
605	6810541	CAP
606	6594061	RUBBER
607	6810172	HOLDER, SENSOR
608	4341631	SPACER
609	4893941	PLATE, SENSOR
610	7478481	PLATE
701	7056763	EVF ASSY
702	4132275	CONNECTOR, FLEXIBLEE
703	5319041	CRT ⚠
704	6810931	HOLDER, NECK
705	6811472	HOLDER, FLEXIBLE
706	6810871	HOLDER
707	6811351	HOLDER
708	4711901	CASE, FRONT
709	4711156	LENS, EVF
710	6443301	CAP, EYE
711	4711165	CASE, BOTTOM
712	7797144	SHOE
752	6960522	PLATE
753	6960523	LENS, REAR
754	6960882	MOTOR, ZOOM
755	6960883	MOTOR, AUTO FOCUS
756	6960942	IRIS
757	6960885	TAPE, IRIS
758	6960886	COVER
759	6960887	AUTO FOCUS BLOCK
760	1620911	PWB ASSY AUTO FOCUS
762	6960531	SCREW
763	6960891	SCREW
764	6960533	SCREW
765	6960534	SCREW
766	6960892	SCREW(1.7X3.5)
767	6960893	SCREW
901	7775946	SCREW(2X6)
902	7775963	SCREW(2X3)
903	8639106	SCREW
904	7775956	SCREW(2X6)
905	7775967	SCREW(2X7)
906	8612114	SCREW (2X14)
907	7775882	SCREW(2X4)
908	8619003	SCREW 1.7X5
951	7775921	SCREW(1.4X2)
952	7775911	SCREW(1.4X1.6)
954	8712974	SCREW(1.4X6)
955	7773531	SCREW
956	7773541	SCREW
957	7775922	SCREW(1.4X2.5)
958	7775921	SCREW(1.4X2)
959	8711104	SCREW 2X4
967	7783153	SCREW(2X4)
	4702271	OPERATING GUIDE
	4130965	AC, ADAPTOR
	5857961	COAXIAL RF CABLE
	5687872	TRANSFORMER(300-TO-75 OHM)
	4131694	RF CONVERTER
	5860781	AUDIO/VIDEO OUTPUT CABLE
	5860791	AUDIO/VIDEO INPUT CABLE
	5699441	AC PLUG ADAPTER
	4131013	STRAP
	4131501	POWER CORD

SYMBOL-NO	P-NO	DISCRIPTION
VTR SECTION		
C 001	0201007	CERAMIC CHIP 0.01UF+-20% 50V
C 001L	0202098	CERAMIC CHIP 0.1UF+80-20% 16V
C 002L	0202098	CERAMIC CHIP 0.1UF+80-20% 16V
C 003L	0202146	CERAMIC CHIP 1.0UF+80-20% 16V
C 004L	0202146	CERAMIC CHIP 1.0UF+80-20% 16V
C 005L	0202047	CERAMIC CHIP 33PF+-5% 50V
C 006	0202146	CERAMIC CHIP 1.0UF+80-20% 16V
C 007	0202098	CERAMIC CHIP 0.1UF+80-20% 16V
C 008L	0202146	CERAMIC CHIP 1.0UF+80-20% 16V
C 009L	0202146	CERAMIC CHIP 1.0UF+80-20% 16V
C 198	0202098	CERAMIC CHIP 0.1UF+80-20% 16V
C 202	0202127	CERAMIC CHIP 0.01UF+80-20% 50V
C 203	0202043	CERAMIC DISC 15PF+-5% 50V
C 204	0202129	CERAMIC CHIP 0.022UF+80-20% 25V
C 205	0202043	CERAMIC DISC 15PF+-5% 50V
C 207	0202127	CERAMIC CHIP 0.01UF+80-20% 50V
C 208	0202053	CERAMIC DISC 82PF+-5% 50V
C 210	0202129	CERAMIC CHIP 0.022UF+80-20% 25V
C 211	0202049	CERAMIC DISC 47PF+-5% 50V
C 212	0202129	CERAMIC CHIP 0.022UF+80-20% 25V
C 213	0202042	CERAMIC CHIP 12PF+-5% 50V
C 214	0202043	CERAMIC DISC 15PF+-5% 50V
C 216	0202104	CERAMIC CHIP 390PF+-10% 50V
C 218	0202049	CERAMIC DISC 47PF+-5% 50V
C 219	0202098	CERAMIC CHIP 0.1UF+80-20% 16V
C 220	0202129	CERAMIC CHIP 0.022UF+80-20% 25V
C 224	0202106	CERAMIC CHIP 560PF+-10% 50V
C 225	0202096	CERAMIC CHIP 0.047UF+80-20% 16V
C 234	0202127	CERAMIC CHIP 0.01UF+80-20% 50V
C 237	0202127	CERAMIC CHIP 0.01UF+80-20% 50V
C 241	0202105	CERAMIC CHIP 470PF+-10% 50V
C 243	0202127	CERAMIC CHIP 0.01UF+80-20% 50V
C 246	0202101	CERAMIC CHIP 220PF+-10% 50V
C 247	0202057	CERAMIC CHIP 180PF+-5% 50V
C 248	0202127	CERAMIC CHIP 0.01UF+80-20% 50V
C 250	0202166	CERAMIC CHIP 820PF+-5% 50V
C 251	0202127	CERAMIC CHIP 0.01UF+80-20% 50V
C 254	0202127	CERAMIC CHIP 0.01UF+80-20% 50V
C 256	0202054	CERAMIC CHIP 100PF+-5% 50V
C 257	0202089	CERAMIC CHIP 33PF+-5% 50V
C 259	0202092	CERAMIC CHIP 47PF+-5% 50V
C 264	0202053	CERAMIC DISC 82PF+-5% 50V
C 265	0202054	CERAMIC CHIP 100PF+-5% 50V
C 268	0202127	CERAMIC CHIP 0.01UF+80-20% 50V
C 269	0202098	CERAMIC CHIP 0.1UF+80-20% 16V
C 271	0202129	CERAMIC CHIP 0.022UF+80-20% 25V
C 274	0202129	CERAMIC CHIP 0.022UF+80-20% 25V
C 276	0202127	CERAMIC CHIP 0.01UF+80-20% 50V
C 278	0202127	CERAMIC CHIP 0.01UF+80-20% 50V
C 279	0202127	CERAMIC CHIP 0.01UF+80-20% 50V
C 280	0202127	CERAMIC CHIP 0.01UF+80-20% 50V
C 281	0202127	CERAMIC CHIP 0.01UF+80-20% 50V
C 282	0202049	CERAMIC DISC 47PF+-5% 50V
C 283	0202035	CERAMIC CHIP 5PF+-0.25% 50V
C 285	0202116	CERAMIC CHIP 3300PF+-10% 50V
C 286	0202059	CERAMIC CHIP 270PF+-5% 50V
C 287	0202129	CERAMIC CHIP 0.022UF+80-20% 25V
C 288	0202129	CERAMIC CHIP 0.022UF+80-20% 25V
C 289	0202129	CERAMIC CHIP 0.022UF+80-20% 25V
C 290	0202109	CERAMIC CHIP 1000PF+-10% 50V
C 291	0202052	CERAMIC DISC 68PF+-5% 50V
C 292	0202055	CERAMIC CHIP 120PF+-5% 50V
C 293	0202046	CERAMIC CHIP 27PF+-5% 50V

SYMBOL-NO	P-NO	DISCRIPTION
C 294	0202061	CERAMIC CHIP 330PF+-5% 50V
C 298	0202129	CERAMIC CHIP 0.022UF+80-20% 25V
C 299	0202054	CERAMIC CHIP 100PF+-5% 50V
C 300	0202042	CERAMIC CHIP 12PF+-5% 50V
C 301	0202045	CERAMIC DISC 22PF+-5% 50V
C 302	0202146	CERAMIC CHIP 1.0UF+80-20% 16V
C 303	0202127	CERAMIC CHIP 0.01UF+80-20% 50V
C 304	0202127	CERAMIC CHIP 0.01UF+80-20% 50V
C 305	0209944	CERAMIC CHIP 150PF+-5% 50V
C 306	0202109	CERAMIC CHIP 1000PF+-10% 50V
C 307	0202127	CERAMIC CHIP 0.01UF+80-20% 50V
C 310	0202127	CERAMIC CHIP 0.01UF+80-20% 50V
C 312	0202127	CERAMIC CHIP 0.01UF+80-20% 50V
C 313	0202053	CERAMIC DISC 82PF+-5% 50V
C 315	0202127	CERAMIC CHIP 0.01UF+80-20% 50V
C 316	0202129	CERAMIC CHIP 0.022UF+80-20% 25V
C 331	0202105	CERAMIC CHIP 470PF+-10% 50V
C 333	0202096	CERAMIC CHIP 0.047UF+80-20% 16V
C 336	0202127	CERAMIC CHIP 0.01UF+80-20% 50V
C 338	0202129	CERAMIC CHIP 0.022UF+80-20% 25V
C 339	0202129	CERAMIC CHIP 0.022UF+80-20% 25V
C 340	0202129	CERAMIC CHIP 0.022UF+80-20% 25V
C 341	0202129	CERAMIC CHIP 0.022UF+80-20% 25V
C 344	0202098	CERAMIC CHIP 0.1UF+80-20% 16V
C 345	0202048	CERAMIC DISC 39PF+-5% 50V
C 346	0202089	CERAMIC CHIP 33PF+-5% 50V
C 347	0202049	CERAMIC DISC 47PF+-5% 50V
C 348	0202098	CERAMIC CHIP 0.1UF+80-20% 16V
C 351	0202158	CERAMIC CHIP 75PF+-5% 50V
C 352	0202082	CERAMIC CHIP 9PF+-5% 50V
C 353	0202115	CERAMIC CHIP 2700PF+-10% 50V
C 354	0202059	CERAMIC CHIP 270PF+-5% 50V
C 355	0202127	CERAMIC CHIP 0.01UF+80-20% 50V
C 356	0202049	CERAMIC DISC 47PF+-5% 50V
C 357	0202045	CERAMIC DISC 22PF+-5% 50V
C 358	0202055	CERAMIC CHIP 120PF+-5% 50V
C 359	0202044	CERAMIC CHIP 18PF+-5% 50V
C 360	0202048	CERAMIC DISC 39PF+-5% 50V
C 362	0202041	CERAMIC CHIP 10PF+-5% 50V
C 363	0202109	CERAMIC CHIP 1000PF+-10% 50V
C 364	0202146	CERAMIC CHIP 1.0UF+80-20% 16V
C 367	0202129	CERAMIC CHIP 0.022UF+80-20% 25V
C 368	0202127	CERAMIC CHIP 0.01UF+80-20% 50V
C 370	0202127	CERAMIC CHIP 0.01UF+80-20% 50V
C 374	0202109	CERAMIC CHIP 1000PF+-10% 50V
C 375	0202109	CERAMIC CHIP 1000PF+-10% 50V
C 378	0202129	CERAMIC CHIP 0.022UF+80-20% 25V
C 379	0202054	CERAMIC CHIP 100PF+-5% 50V
C 380	0202059	CERAMIC CHIP 270PF+-5% 50V
C 381	0202127	CERAMIC CHIP 0.01UF+80-20% 50V
C 382	0202129	CERAMIC CHIP 0.022UF+80-20% 25V
C 383	0202129	CERAMIC CHIP 0.022UF+80-20% 25V
C 384	0202053	CERAMIC DISC 82PF+-5% 50V
C 385	0202129	CERAMIC CHIP 0.022UF+80-20% 25V
C 386	0202127	CERAMIC CHIP 0.01UF+80-20% 50V
C 387	0202054	CERAMIC CHIP 100PF+-5% 50V
C 388	0202109	CERAMIC CHIP 1000PF+-10% 50V
C 389	0202104	CERAMIC CHIP 390PF+-10% 50V
C 398	0202129	CERAMIC CHIP 0.022UF+80-20% 25V
C 601	0201107	CERAMIC CHIP 0.047UF+-10% 25V
C 602	0202157	CERAMIC CHIP 680PF+-2% 50V
C 604	0202156	CERAMIC CHIP 22PF+-2% 50V
C 605	0202023	CERAMIC CHIP 1000PF+-2% 50V
C 606	0202022	CERAMIC CHIP 56PF+-2% 50V
C 607	0202015	CERAMIC CHIP 390PF+-2% 50V

SYMBOL-NO	P-NO	DISCRIPTION
C 608	0202058	CERAMIC CHIP 220PF+-5% 50V
C 609	0202118	CERAMIC CHIP 4700PF+-10% 25V
C 610	0202109	CERAMIC CHIP 1000PF+-10% 50V
C 611	0202116	CERAMIC CHIP 3300PF+-10% 50V
C 612	0202146	CERAMIC CHIP 1.0UF+80-20% 16V
C 614	0201107	CERAMIC CHIP 0.047UF+-10% 25V
C 615	0202127	CERAMIC CHIP 0.01UF+80-20% 50V
C 617	0201065	CERAMIC CHIP 0.022UF+-10% 25V
C 618	0201065	CERAMIC CHIP 0.022UF+-10% 25V
C 619	0201065	CERAMIC CHIP 0.022UF+-10% 25V
C 620	0202109	CERAMIC CHIP 1000PF+-10% 50V
C 621	0202109	CERAMIC CHIP 1000PF+-10% 50V
C 622	0209969	CERAMIC CHIP 0.1UF+80-20% 25V
C 624	0202089	CERAMIC CHIP 33PF+-5% 50V
C 625	0202089	CERAMIC CHIP 33PF+-5% 50V
C 626	0201007	CERAMIC CHIP 0.01UF+-20% 50V
C 629	0209964	CERAMIC CHIP 0.33UF+80-20% 16V
C 631	0202127	CERAMIC CHIP 0.01UF+80-20% 50V
C 632	0202146	CERAMIC CHIP 1.0UF+80-20% 16V
C 634	0201107	CERAMIC CHIP 0.047UF+-10% 25V
C 636	0202127	CERAMIC CHIP 0.01UF+80-20% 50V
C 637	0201039	CERAMIC CHIP 470PF+-5% 50V
C 638	0202141	CERAMIC CHIP 0.1UF+-10% 25V
C 639	0201008	CERAMIC CHIP 0.015UF+-20% 50V
C 640	0202114	CERAMIC CHIP 2200PF+-10% 50V
C 643	0202141	CERAMIC CHIP 0.1UF+-10% 25V
C 644	0202141	CERAMIC CHIP 0.1UF+-10% 25V
C 645	0202141	CERAMIC CHIP 0.1UF+-10% 25V
C 646	0202098	CERAMIC CHIP 0.1UF+80-20% 16V
C 647	0202098	CERAMIC CHIP 0.1UF+80-20% 16V
C 648	0202114	CERAMIC CHIP 2200PF+-10% 50V
C 649	0202098	CERAMIC CHIP 0.1UF+80-20% 16V
C 650	0202141	CERAMIC CHIP 0.1UF+-10% 25V
C 651	0202141	CERAMIC CHIP 0.1UF+-10% 25V
C 652	0202141	CERAMIC CHIP 0.1UF+-10% 25V
C 653	0202098	CERAMIC CHIP 0.1UF+80-20% 16V
C 654	0202098	CERAMIC CHIP 0.1UF+80-20% 16V
C 655	0202098	CERAMIC CHIP 0.1UF+80-20% 16V
C 656	0202089	CERAMIC CHIP 33PF+-5% 50V
C 662	0202098	CERAMIC CHIP 0.1UF+80-20% 16V
C 663	0202146	CERAMIC CHIP 1.0UF+80-20% 16V
C 902	0202098	CERAMIC CHIP 0.1UF+80-20% 16V
C 904	0202141	CERAMIC CHIP 0.1UF+-10% 25V
C 905	0202146	CERAMIC CHIP 1.0UF+80-20% 16V
C 906	0202146	CERAMIC CHIP 1.0UF+80-20% 16V
C 907	0202118	CERAMIC CHIP 4700PF+-10% 25V
C 908	0202098	CERAMIC CHIP 0.1UF+80-20% 16V
C 909	0202084	CERAMIC CHIP 12PF+-5% 50V
C 910	0202084	CERAMIC CHIP 12PF+-5% 50V
C 911	0202098	CERAMIC CHIP 0.1UF+80-20% 16V
C 912	0201062	CERAMIC CHIP 0.0068UF+-10% 50V
C 913	0202141	CERAMIC CHIP 0.1UF+-10% 25V
C 914	0201054	CERAMIC CHIP 1000PF+-10% 50V
C 915	0201062	CERAMIC CHIP 0.0068UF+-10% 50V
C 916	0202141	CERAMIC CHIP 0.1UF+-10% 25V
C 917	0201054	CERAMIC CHIP 1000PF+-10% 50V
C 918	0202098	CERAMIC CHIP 0.1UF+80-20% 16V
C 919	0202141	CERAMIC CHIP 0.1UF+-10% 25V
C 920	0202141	CERAMIC CHIP 0.1UF+-10% 25V
C 921	0202118	CERAMIC CHIP 4700PF+-10% 25V
C 923	0202098	CERAMIC CHIP 0.1UF+80-20% 16V
C 924	0202146	CERAMIC CHIP 1.0UF+80-20% 16V
C 926	0202098	CERAMIC CHIP 0.1UF+80-20% 16V
C 929	0202098	CERAMIC CHIP 0.1UF+80-20% 16V
C 934	0202098	CERAMIC CHIP 0.1UF+80-20% 16V

SYMBOL-NO	P-NO	DISCRIPTION
C 935	0202141	CERAMIC CHIP 0.1UF+-10% 25V
C 940	0202146	CERAMIC CHIP 1.0UF+80-20% 16V
C 941	0202146	CERAMIC CHIP 1.0UF+80-20% 16V
C 945	0202146	CERAMIC CHIP 1.0UF+80-20% 16V
C 946	0202098	CERAMIC CHIP 0.1UF+80-20% 16V
C 947	0202098	CERAMIC CHIP 0.1UF+80-20% 16V
C 949	0201107	CERAMIC CHIP 0.047UF+-10% 25V
C 950	0209964	CERAMIC CHIP 0.33UF+80-20% 16V
C 951	0209964	CERAMIC CHIP 0.33UF+80-20% 16V
C 953	0202041	CHIP CERAMIC 10PF+-5% 50V
C 954	0202042	CHIP CERAMIC 12PF+-5% 50V
R 001	0103837	CHIP RESISTOR 330 OHM+-5% 0.1W
R 002	0103837	CHIP RESISTOR 330 OHM+-5% 0.1W
R 001L	0104039	CHIP RESISTOR 1.5KOHM+-5% 1/16W
R 002L	0104045	CHIP RESISTOR 3.9KOHM+-5% 1/16W
R 003L	0104076	CHIP RESISTOR 1MOHM+-5% 1/16W
R 004L	0104053	CHIP RESISTOR 15KOHM+-5% 1/16W
R 005L	0104044	CHIP RESISTOR 3.3KOHM+-5% 1/16W
R 006L	0104056	CHIP RESISTOR 27KOHM+-5% 1/16W
R 007L	0104048	CHIP RESISTOR 6.8KOHM+-5% 1/16W
R 008L	0104051	CHIP RESISTOR 10KOHM+-5% 1/16W
R 009L	0104075	CHIP RESISTOR 820KOHM+-5% 1/16W
R 010	0104055	CHIP RESISTOR 22KOHM+-5% 1/16W
R 011	0104055	CHIP RESISTOR 22KOHM+-5% 1/16W
R 012	0104059	CHIP RESISTOR 56KOHM+-5% 1/16W
R 051	0103843	CHIP RESISTOR 1KOHM+-5% 0.1W
R 101	0104051	CHIP RESISTOR 10KOHM+-5% 1/16W
R 102	0104055	CHIP RESISTOR 22KOHM+-5% 1/16W
R 103	0104027	CARBON FILM 180 OHM+-5% 1/16W
R 104	0104042	CHIP RESISTOR 2.2KOHM+-5% 1/16W
R 105	0104034	CHIP RESISTOR 560 OHM+-5% 1/16W
R 106	0104056	CHIP RESISTOR 27KOHM+-5% 1/16W
R 107	0104055	CHIP RESISTOR 22KOHM+-5% 1/16W
R 108	0104037	CHIP RESISTOR 1KOHM+-5% 1/16W
R 109	0104047	CHIP RESISTOR 5.6KOHM+-5% 1/16W
R 110	0104043	CHIP RESISTOR 2.7KOHM+-5% 1/16W
R 111	0104041	CHIP RESISTOR 1.8KOHM+-5% 1/16W
R 112	0104058	CHIP RESISTOR 47KOHM+-5% 1/16W
R 113	0104076	CHIP RESISTOR 1000KOHM+-5% 1/16W
R 114	0104076	CHIP RESISTOR 1000KOHM+-5% 1/16W
R 118	0104051	CHIP RESISTOR 10KOHM+-5% 1/16W
R 131	0104045	CHIP RESISTOR 3.9KOHM+-5% 1/16W
R 132	0104034	CHIP RESISTOR 560 OHM+-5% 1/16W
R 133	0104044	CHIP RESISTOR 3.3KOHM+-5% 1/16W
R 138	0104061	CHIP RESISTOR 68KOHM+-5% 1/16W
R 146	0104042	CHIP RESISTOR 2.2KOHM+-5% 1/16W
R 147	0104048	CHIP RESISTOR 6.8KOHM+-5% 1/16W
R 148	0104068	CHIP RESISTOR 270KOHM+-5% 1/16W
R 149	0104083	CHIP RESISTOR 33KOHM+-5% 1/16W
R 150	0104052	CHIP RESISTOR 12KOHM+-5% 1/16W
R 151	0104031	CHIP RESISTOR 330 OHM+-5% 1/16W
R 152	0104037	CHIP RESISTOR 1KOHM+-5% 1/16W
R 153	0104076	CHIP RESISTOR 1000KOHM+-5% 1/16W
R 201	0104051	CHIP RESISTOR 10KOHM+-5% 1/16W
R 202	0104052	CHIP RESISTOR 12KOHM+-5% 1/16W
R 203	0104028	CHIP RESISTOR 220 OHM+-5% 1/16W
R 205	0104031	CHIP RESISTOR 330 OHM+-5% 1/16W
R 206	0104027	CARBON FILM 180 OHM+-5% 1/16W
R 207	0104037	CHIP RESISTOR 1KOHM+-5% 1/16W
R 208	0104054	CHIP RESISTOR 18KOHM+-5% 1/16W
R 209	0104054	CHIP RESISTOR 18KOHM+-5% 1/16W
R 210	0104037	CHIP RESISTOR 1KOHM+-5% 1/16W
R 211	0104032	CHIP RESISTOR 390 OHM+-5% 1/16W
R 212	0104055	CHIP RESISTOR 22KOHM+-5% 1/16W
R 213	0104056	CHIP RESISTOR 27KOHM+-5% 1/16W

SYMBOL-NO	P-NO	DISCRIPTION
R 214	0104037	CHIP RESISTOR 1KOHM+-5% 1/16W
R 215	0104035	CHIP RESISTOR 680 OHM+-5% 1/16W
R 216	0104028	CHIP RESISTOR 220 OHM+-5% 1/16W
R 217	0104028	CHIP RESISTOR 220 OHM+-5% 1/16W
R 218	0104032	CHIP RESISTOR 390 OHM+-5% 1/16W
R 219	0104029	CHIP RESISTOR 270 OHM+-5% 1/16W
R 220	0104035	CHIP RESISTOR 680 OHM+-5% 1/16W
R 221	0104036	CHIP RESISTOR 820 OHM+-5% 1/16W
R 222	0104053	CHIP RESISTOR 15KOHM+-5% 1/16W
R 223	0104051	CHIP RESISTOR 10KOHM+-5% 1/16W
R 224	0104032	CHIP RESISTOR 390 OHM+-5% 1/16W
R 225	0104037	CHIP RESISTOR 1KOHM+-5% 1/16W
R 226	0104036	CHIP RESISTOR 820 OHM+-5% 1/16W
R 227	0104034	CHIP RESISTOR 560 OHM+-5% 1/16W
R 228	0104043	CHIP RESISTOR 2.7KOHM+-5% 1/16W
R 231	0104055	CHIP RESISTOR 22KOHM+-5% 1/16W
R 232	0104083	CHIP RESISTOR 33KOHM+-5% 1/16W
R 233	0104033	CHIP RESISTOR 470 OHM+-5% 1/16W
R 234	0104033	CHIP RESISTOR 470 OHM+-5% 1/16W
R 235	0104024	CHIP RESISTOR 100 OHM+-5% 1/16W
R 236	0104034	CHIP RESISTOR 560 OHM+-5% 1/16W
R 237	0104042	CHIP RESISTOR 2.2KOHM+-5% 1/16W
R 239	0104042	CHIP RESISTOR 2.2KOHM+-5% 1/16W
R 241	0104298	CHIP RESISTOR 100KOHM+-0.5% 1/16W
R 243	0104554	CHIP RESISTOR 1KOHM+-1% 1/16W
R 244	0104554	CHIP RESISTOR 1KOHM+-1% 1/16W
R 245	0104554	CHIP RESISTOR 1KOHM+-1% 1/16W
R 246	0104072	CHIP RESISTOR 470KOHM+-5% 1/16W
R 247	0103826	CHIP RESISTOR 39 OHM+-5% 0.1W
R 248	0103826	CHIP RESISTOR 39 OHM+-5% 0.1W
R 249	0104037	CHIP RESISTOR 1KOHM+-5% 1/16W
R 250	0104034	CHIP RESISTOR 560 OHM+-5% 1/16W
R 255	0104058	CHIP RESISTOR 47KOHM+-5% 1/16W
R 256	0104042	CHIP RESISTOR 2.2KOHM+-5% 1/16W
R 257	0104047	CHIP RESISTOR 5.6KOHM+-5% 1/16W
R 258	0104047	CHIP RESISTOR 5.6KOHM+-5% 1/16W
R 259	0104037	CHIP RESISTOR 1KOHM+-5% 1/16W
R 260	0104038	CHIP RESISTOR 1.2KOHM+-5% 1/16W
R 261	0104033	CHIP RESISTOR 470 OHM+-5% 1/16W
R 262	0104044	CHIP RESISTOR 3.3KOHM+-5% 1/16W
R 263	0104037	CHIP RESISTOR 1KOHM+-5% 1/16W
R 264	0104037	CHIP RESISTOR 1KOHM+-5% 1/16W
R 265	0104029	CHIP RESISTOR 270 OHM+-5% 1/16W
R 266	0104035	CHIP RESISTOR 680 OHM+-5% 1/16W
R 267	0104056	CHIP RESISTOR 27KOHM+-5% 1/16W
R 268	0104038	CHIP RESISTOR 1.2KOHM+-5% 1/16W
R 269	0104047	CHIP RESISTOR 5.6KOHM+-5% 1/16W
R 270	0104035	CHIP RESISTOR 680 OHM+-5% 1/16W
R 271	0104037	CHIP RESISTOR 1KOHM+-5% 1/16W
R 272	0104039	CHIP RESISTOR 1.5KOHM+-5% 1/16W
R 273	0104036	CHIP RESISTOR 820 OHM+-5% 1/16W
R 274	0104037	CHIP RESISTOR 1KOHM+-5% 1/16W
R 276	0104032	CHIP RESISTOR 390 OHM+-5% 1/16W
R 277	0104055	CHIP RESISTOR 22KOHM+-5% 1/16W
R 278	0104057	CHIP RESISTOR 39KOHM+-5% 1/16W
R 280	0104042	CHIP RESISTOR 2.2KOHM+-5% 1/16W
R 281	0104033	CHIP RESISTOR 470 OHM+-5% 1/16W
R 282	0104037	CHIP RESISTOR 1KOHM+-5% 1/16W
R 283	0104037	CHIP RESISTOR 1KOHM+-5% 1/16W
R 284	0104033	CHIP RESISTOR 470 OHM+-5% 1/16W
R 285	0104033	CHIP RESISTOR 470 OHM+-5% 1/16W
R 286	0104044	CHIP RESISTOR 3.3KOHM+-5% 1/16W
R 287	0104076	CHIP RESISTOR 1000KOHM+-5% 1/16W
R 288	0104033	CHIP RESISTOR 470 OHM+-5% 1/16W
R 289	0104062	CHIP RESISTOR 82KOHM+-5% 1/16W

SYMBOL-NO	P-NO	DISCRIPTION
R 290	0104038	CHIP RESISTOR 1.2KOHM+-5% 1/16W
R 291	0104047	CHIP RESISTOR 5.6KOHM+-5% 1/16W
R 292	0104045	CHIP RESISTOR 3.9KOHM+-5% 1/16W
R 293	0104033	CHIP RESISTOR 470 OHM+-5% 1/16W
R 294	0104047	CHIP RESISTOR 5.6KOHM+-5% 1/16W
R 295	0104048	CHIP RESISTOR 6.8KOHM+-5% 1/16W
R 296	0104051	CHIP RESISTOR 10KOHM+-5% 1/16W
R 297	0104038	CHIP RESISTOR 1.2KOHM+-5% 1/16W
R 299	0104298	CHIP RESISTOR 100KOHM+-0.5% 1/16W
R 300	0104048	CHIP RESISTOR 6.8KOHM+-5% 1/16W
R 301	0104046	CHIP RESISTOR 4.7KOHM+-5% 1/16W
R 302	0104042	CHIP RESISTOR 2.2KOHM+-5% 1/16W
R 303	0104048	CHIP RESISTOR 6.8KOHM+-5% 1/16W
R 304	0104045	CHIP RESISTOR 3.9KOHM+-5% 1/16W
R 305	0104045	CHIP RESISTOR 3.9KOHM+-5% 1/16W
R 307	0104044	CHIP RESISTOR 3.3KOHM+-5% 1/16W
R 308	0104043	CHIP RESISTOR 2.7KOHM+-5% 1/16W
R 309	0104045	CHIP RESISTOR 3.9KOHM+-5% 1/16W
R 310	0104038	CHIP RESISTOR 1.2KOHM+-5% 1/16W
R 311	0104037	CHIP RESISTOR 1KOHM+-5% 1/16W
R 313	0104039	CHIP RESISTOR 1.5KOHM+-5% 1/16W
R 314	0104036	CHIP RESISTOR 820 OHM+-5% 1/16W
R 315	0104051	CHIP RESISTOR 10KOHM+-5% 1/16W
R 333	0104038	CHIP RESISTOR 1.2KOHM+-5% 1/16W
R 334	0104038	CHIP RESISTOR 1.2KOHM+-5% 1/16W
R 335	0104043	CHIP RESISTOR 2.7KOHM+-5% 1/16W
R 336	0104031	CHIP RESISTOR 330 OHM+-5% 1/16W
R 337	0103825	CHIP RESISTOR 33OHM+-5% 0.1W
R 339	0104046	CHIP RESISTOR 4.7KOHM+-5% 1/16W
R 343	0104031	CHIP RESISTOR 330 OHM+-5% 1/16W
R 344	0104031	CHIP RESISTOR 330 OHM+-5% 1/16W
R 347	0104057	CHIP RESISTOR 39KOHM+-5% 1/16W
R 348	0104061	CHIP RESISTOR 68KOHM+-5% 1/16W
R 349	0104083	CHIP RESISTOR 33KOHM+-5% 1/16W
R 350	0104034	CHIP RESISTOR 560 OHM+-5% 1/16W
R 351	0104033	CHIP RESISTOR 470 OHM+-5% 1/16W
R 352	0103817	CHIP RESISTOR 6.8OHM+-10% 0.1W
R 354	0104039	CHIP RESISTOR 1.5KOHM+-5% 1/16W
R 355	0104044	CHIP RESISTOR 3.3KOHM+-5% 1/16W
R 356	0104029	CHIP RESISTOR 270 OHM+-5% 1/16W
R 357	0104044	CHIP RESISTOR 3.3KOHM+-5% 1/16W
R 358	0104037	CHIP RESISTOR 1KOHM+-5% 1/16W
R 359	0104027	CARBON FILM 180 OHM+-5% 1/16W
R 360	0104035	CHIP RESISTOR 680 OHM+-5% 1/16W
R 362	0104039	CHIP RESISTOR 1.5KOHM+-5% 1/16W
R 363	0104034	CHIP RESISTOR 560 OHM+-5% 1/16W
R 364	0104053	CHIP RESISTOR 15KOHM+-5% 1/16W
R 365	0104051	CHIP RESISTOR 10KOHM+-5% 1/16W
R 366	0104033	CHIP RESISTOR 470 OHM+-5% 1/16W
R 367	0104033	CHIP RESISTOR 470 OHM+-5% 1/16W
R 368	0104034	CHIP RESISTOR 560 OHM+-5% 1/16W
R 369	0104034	CHIP RESISTOR 560 OHM+-5% 1/16W
R 370	0104034	CHIP RESISTOR 560 OHM+-5% 1/16W
R 371	0104038	CHIP RESISTOR 1.2KOHM+-5% 1/16W
R 372	0104037	CHIP RESISTOR 1KOHM+-5% 1/16W
R 373	0104037	CHIP RESISTOR 1KOHM+-5% 1/16W
R 374	0104025	CHIP RESISTOR 120 OHM+-5% 1/16W
R 376	0104554	CHIP RESISTOR 1KOHM+-1% 1/16W
R 378	0104045	CHIP RESISTOR 3.9KOHM+-5% 1/16W
R 379	0104037	CHIP RESISTOR 1KOHM+-5% 1/16W
R 380	0104045	CHIP RESISTOR 3.9KOHM+-5% 1/16W
R 381	0104037	CHIP RESISTOR 1KOHM+-5% 1/16W
R 382	0104037	CHIP RESISTOR 1KOHM+-5% 1/16W
R 383	0104046	CHIP RESISTOR 4.7KOHM+-5% 1/16W
R 384	0104031	CHIP RESISTOR 330 OHM+-5% 1/16W

SYMBOL-NO	P-NO	DISCRIPTION
R 385	0104031	CHIP RESISTOR 330 OHM+-5% 1/16W
R 386	0104046	CHIP RESISTOR 4.7KOHM+-5% 1/16W
R 387	0104046	CHIP RESISTOR 4.7KOHM+-5% 1/16W
R 388	0104051	CHIP RESISTOR 10KOHM+-5% 1/16W
R 389	0104051	CHIP RESISTOR 10KOHM+-5% 1/16W
R 391	0104044	CHIP RESISTOR 3.3KOHM+-5% 1/16W
R 394	0104045	CHIP RESISTOR 3.9KOHM+-5% 1/16W
R 395	0104033	CHIP RESISTOR 470 OHM+-5% 1/16W
R 396	0104058	CHIP RESISTOR 47KOHM+-5% 1/16W
R 397	0104042	CHIP RESISTOR 2.2KOHM+-5% 1/16W
R 398	0104055	CHIP RESISTOR 22KOHM+-5% 1/16W
R 601	0104277	CHIP RESISTOR 5.1KOHM+-1% 1/10W
R 602	0104277	CHIP RESISTOR 5.1KOHM+-1% 1/10W
R 604	0104046	CHIP RESISTOR 4.7KOHM+-5% 1/16W
R 605	0104276	CHIP RESISTOR 5.6KOHM+-1% 1/10W
R 606	0104277	CHIP RESISTOR 5.1KOHM+-1% 1/10W
R 607	0104048	CHIP RESISTOR 6.8KOHM+-5% 1/16W
R 608	0104049	CHIP RESISTOR 8.2KOHM+-5% 1/16W
R 609	0104083	CHIP RESISTOR 33KOHM+-5% 1/16W
R 610	0104057	CHIP RESISTOR 39KOHM+-5% 1/16W
R 611	0104034	CHIP RESISTOR 560 OHM+-5% 1/16W
R 612	0104029	CHIP RESISTOR 270 OHM+-5% 1/16W
R 613	0104027	CARBON FILM 180 OHM+-5% 1/16W
R 614	0104055	CHIP RESISTOR 22KOHM+-5% 1/16W
R 615	0104058	CHIP RESISTOR 47KOHM+-5% 1/16W
R 616	0104037	CHIP RESISTOR 1KOHM+-5% 1/16W
R 617	0104051	CHIP RESISTOR 10KOHM+-5% 1/16W
R 618	0104074	CHIP RESISTOR 680KOHM+-5% 1/16W
R 619	0104046	CHIP RESISTOR 4.7KOHM+-5% 1/16W
R 620	0104033	CHIP RESISTOR 470 OHM+-5% 1/16W
R 621	0104033	CHIP RESISTOR 470 OHM+-5% 1/16W
R 622	0104051	CHIP RESISTOR 10KOHM+-5% 1/16W
R 623	0104051	CHIP RESISTOR 10KOHM+-5% 1/16W
R 624	0104051	CHIP RESISTOR 10KOHM+-5% 1/16W
R 625	0104038	CHIP RESISTOR 1.2KOHM+-5% 1/16W
R 626	0104076	CHIP RESISTOR 1000KOHM+-5% 1/16W
R 627	0104056	CHIP RESISTOR 27KOHM+-5% 1/16W
R 628	0104055	CHIP RESISTOR 22KOHM+-5% 1/16W
R 629	0104072	CHIP RESISTOR 470KOHM+-5% 1/16W
R 630	0104031	CHIP RESISTOR 330 OHM+-5% 1/16W
R 631	0104057	CHIP RESISTOR 39KOHM+-5% 1/16W
R 632	0104051	CHIP RESISTOR 10KOHM+-5% 1/16W
R 633	0104057	CHIP RESISTOR 39KOHM+-5% 1/16W
R 634	0104033	CHIP RESISTOR 470 OHM+-5% 1/16W
R 635	0104045	CHIP RESISTOR 3.9KOHM+-5% 1/16W
R 636	0104069	CHIP RESISTOR 330KOHM+-5% 1/16W
R 638	0104051	CHIP RESISTOR 10KOHM+-5% 1/16W
R 639	0104069	CHIP RESISTOR 330KOHM+-5% 1/16W
R 640	0104063	CHIP RESISTOR 100KOHM+-5% 1/16W
R 642	0104051	CHIP RESISTOR 10KOHM+-5% 1/16W
R 643	0104056	CHIP RESISTOR 27KOHM+-5% 1/16W
R 644	0104051	CHIP RESISTOR 10KOHM+-5% 1/16W
R 645	0104056	CHIP RESISTOR 27KOHM+-5% 1/16W
R 646	0104048	CHIP RESISTOR 6.8KOHM+-5% 1/16W
R 647	0104062	CHIP RESISTOR 82KOHM+-5% 1/16W
R 648	0104076	CHIP RESISTOR 1000KOHM+-5% 1/16W
R 649	0104037	CHIP RESISTOR 1KOHM+-5% 1/16W
R 650	0104022	CHIP RESISTOR 68 OHM+-5% 1/16W
R 651	0104026	CHIP RESISTOR 150 OHM+-5% 1/16W
R 652	0104083	CHIP RESISTOR 33KOHM+-5% 1/16W
R 653	0104051	CHIP RESISTOR 10KOHM+-5% 1/16W
R 655	0104028	CHIP RESISTOR 220 OHM+-5% 1/16W
R 656	0104115	CHIP RESISTOR 3.9KOHM 1/10W
R 657	0104047	CHIP RESISTOR 5.6KOHM+-5% 1/16W
R 658	0104085	CHIP RESISTOR 2.2 OHM+-5% 1/16W

SYMBOL-NO	P-NO	DISCRIPTION
R 659	0104085	CHIP RESISTOR 2.2 OHM+-5% 1/16W
R 660	0104085	CHIP RESISTOR 2.2 OHM+-5% 1/16W
R 661	0104058	CHIP RESISTOR 47KOHM+-5% 1/16W
R 662	0104053	CHIP RESISTOR 15KOHM+-5% 1/16W
R 663	0104063	CHIP RESISTOR 100KOHM+-5% 1/16W
R 664	0103831	CHIP RESISTOR 100 OHM+-5% 0.1W
R 665	0104024	CHIP RESISTOR 100 OHM+-5% 1/16W
R 667	0104046	CHIP RESISTOR 4.7KOHM+-5% 1/16W
R 668	0104043	CHIP RESISTOR 2.7KOHM+-5% 1/16W
R 669	0104085	CHIP RESISTOR 2.2 OHM+-5% 1/16W
R 670	0104085	CHIP RESISTOR 2.2 OHM+-5% 1/16W
R 671	0104085	CHIP RESISTOR 2.2 OHM+-5% 1/16W
R 672	0104046	CHIP RESISTOR 4.7KOHM+-5% 1/16W
R 673	0104054	CHIP RESISTOR 18KOHM+-5% 1/16W
R 674	0104062	CHIP RESISTOR 82KOHM+-5% 1/16W
R 675	0104043	CHIP RESISTOR 2.7KOHM+-5% 1/16W
R 676	0104045	CHIP RESISTOR 3.9KOHM+-5% 1/16W
R 680	0104063	CHIP RESISTOR 100KOHM+-5% 1/16W
R 681	0104063	CHIP RESISTOR 100KOHM+-5% 1/16W
R 682	0104058	CHIP RESISTOR 47KOHM+-5% 1/16W
R 689	0104037	CHIP RESISTOR 1KOHM+-5% 1/16W
R 691	0104051	CHIP RESISTOR 10KOHM+-5% 1/16W
R 693	0104044	CHIP RESISTOR 3.3KOHM+-5% 1/16W
R 694	0104042	CHIP RESISTOR 2.2KOHM+-5% 1/16W
R 701	0104058	CHIP RESISTOR 47KOHM+-5% 1/16W
R 702	0104058	CHIP RESISTOR 47KOHM+-5% 1/16W
R 703	0104058	CHIP RESISTOR 47KOHM+-5% 1/16W
R 704	0104053	CHIP RESISTOR 15KOHM+-5% 1/16W
R 705	0104053	CHIP RESISTOR 15KOHM+-5% 1/16W
R 706	0104053	CHIP RESISTOR 15KOHM+-5% 1/16W
R 708	0104053	CHIP RESISTOR 15KOHM+-5% 1/16W
R 709	0104053	CHIP RESISTOR 15KOHM+-5% 1/16W
R 710	0104053	CHIP RESISTOR 15KOHM+-5% 1/16W
R 711	0104041	CHIP RESISTOR 1.8KOHM+-5% 1/16W
R 713	0104037	CHIP RESISTOR 1KOHM+-5% 1/16W
R 714	0104037	CHIP RESISTOR 1KOHM+-5% 1/16W
R 715	0104044	CHIP RESISTOR 3.3KOHM+-5% 1/16W
R 716	0104038	CHIP RESISTOR 1.2KOHM+-5% 1/16W
R 717	0104027	CARBON FILM 180 OHM+-5% 1/16W
R 718	0104041	CHIP RESISTOR 1.8KOHM+-5% 1/16W
R 719	0104052	CHIP RESISTOR 12KOHM+-5% 1/16W
R 720	0104027	CARBON FILM 180 OHM+-5% 1/16W
R 721	0104048	CHIP RESISTOR 6.8KOHM+-5% 1/16W
R 722	0104051	CHIP RESISTOR 10KOHM+-5% 1/16W
R 723	0104051	CHIP RESISTOR 10KOHM+-5% 1/16W
R 724	0104051	CHIP RESISTOR 10KOHM+-5% 1/16W
R 725	0104051	CHIP RESISTOR 10KOHM+-5% 1/16W
R 726	0104051	CHIP RESISTOR 10KOHM+-5% 1/16W
R 727	0104051	CHIP RESISTOR 10KOHM+-5% 1/16W
R 728	0104058	CHIP RESISTOR 47KOHM+-5% 1/16W
R 729	0104072	CHIP RESISTOR 470KOHM+-5% 1/16W
R 732	0104046	CHIP RESISTOR 4.7KOHM+-5% 1/16W
R 738	0104038	CHIP RESISTOR 1.2KOHM+-5% 1/16W
R 739	0104046	CHIP RESISTOR 4.7KOHM+-5% 1/16W
R 741	0104063	CHIP RESISTOR 100KOHM+-5% 1/16W
R 742	0104067	CHIP RESISTOR 220KOHM+-5% 1/16W
R 745	0104063	CHIP RESISTOR 100KOHM+-5% 1/16W
R 748	0104049	CHIP RESISTOR 8.2KOHM+-5% 1/16W
R 749	0104058	CHIP RESISTOR 47KOHM+-5% 1/16W
R 750	0104046	CHIP RESISTOR 4.7KOHM+-5% 1/16W
R 751	0104058	CHIP RESISTOR 47KOHM+-5% 1/16W
R 752	0104058	CHIP RESISTOR 47KOHM+-5% 1/16W
R 753	0104063	CHIP RESISTOR 100KOHM+-5% 1/16W
R 754	0104046	CHIP RESISTOR 4.7KOHM+-5% 1/16W
R 755	0104046	CHIP RESISTOR 4.7KOHM+-5% 1/16W

SYMBOL-NO	P-NO	DISCRIPTION
R 756	0104051	CHIP RESISTOR 10KOHM+-5% 1/16W
R 757	0104051	CHIP RESISTOR 10KOHM+-5% 1/16W
R 758	0104051	CHIP RESISTOR 10KOHM+-5% 1/16W
R 761	0104046	CHIP RESISTOR 4.7KOHM+-5% 1/16W
R 762	0104063	CHIP RESISTOR 100KOHM+-5% 1/16W
R 901	0104037	CHIP RESISTOR 1KOHM+-5% 1/16W
R 902	0104051	CHIP RESISTOR 10KOHM+-5% 1/16W
R 903	0104051	CHIP RESISTOR 10KOHM+-5% 1/16W
R 904	0104049	CHIP RESISTOR 8.2KOHM+-5% 1/16W
R 905	0104041	CHIP RESISTOR 1.8KOHM+-5% 1/16W
R 906	0104041	CHIP RESISTOR 1.8KOHM+-5% 1/16W
R 907	0104047	CHIP RESISTOR 5.6KOHM+-5% 1/16W
R 908	0104051	CHIP RESISTOR 10KOHM+-5% 1/16W
R 909	0104037	CHIP RESISTOR 1KOHM+-5% 1/16W
R 910	0104267	CHIP RESISTOR 75 OHM+-1% 1/10W
R 911	0104039	CHIP RESISTOR 1.5KOHM+-5% 1/16W
R 912	0104051	CHIP RESISTOR 10KOHM+-5% 1/16W
R 913	0104058	CHIP RESISTOR 47KOHM+-5% 1/16W
R 914	0104063	CHIP RESISTOR 100KOHM+-5% 1/16W
R 915	0104058	CHIP RESISTOR 47KOHM+-5% 1/16W
R 916	0104051	CHIP RESISTOR 10KOHM+-5% 1/16W
R 921	0104051	CHIP RESISTOR 10KOHM+-5% 1/16W
R 922	0104058	CHIP RESISTOR 47KOHM+-5% 1/16W
R 923	0104051	CHIP RESISTOR 10KOHM+-5% 1/16W
R 927	0104058	CHIP RESISTOR 47KOHM+-5% 1/16W
R 928	0104058	CHIP RESISTOR 47KOHM+-5% 1/16W
R 929	0104063	CHIP RESISTOR 100KOHM+-5% 1/16W
R 931	0104051	CHIP RESISTOR 10KOHM+-5% 1/16W
R 932	0104051	CHIP RESISTOR 10KOHM+-5% 1/16W
R 933	0104051	CHIP RESISTOR 10KOHM+-5% 1/16W
R 934	0104051	CHIP RESISTOR 10KOHM+-5% 1/16W
R 935	0104063	CHIP RESISTOR 100KOHM+-5% 1/16W
R 936	0104051	CHIP RESISTOR 10KOHM+-5% 1/16W
R 938	0104063	CHIP RESISTOR 100KOHM+-5% 1/16W
R 940	0104585	CHIP RESISTOR 100KOHM+-5% 1/32W
R 941	0104037	CHIP RESISTOR 1KOHM+-5% 1/16W
R 943	0104037	CHIP RESISTOR 1KOHM+-5% 1/16W
R 945	0104037	CHIP RESISTOR 1KOHM+-5% 1/16W
R 946	0104111	METAL FILM 10KOHM+-10% 1/10W
R 947	0104116	CHIP RESISTOR 39KOHM 1/10W
R 948	0104116	CHIP RESISTOR 39KOHM 1/10W
R 949	0104051	CHIP RESISTOR 10KOHM+-5% 1/16W
R 950	0104062	CHIP RESISTOR 82KOHM+-5% 1/16W
R 951	0104061	CHIP RESISTOR 68KOHM+-5% 1/16W
R 952	0104051	CHIP RESISTOR 10KOHM+-5% 1/16W
R 953	0104062	CHIP RESISTOR 82KOHM+-5% 1/16W
R 954	0104061	CHIP RESISTOR 68KOHM+-5% 1/16W
R 955	0104051	CHIP RESISTOR 10KOHM+-5% 1/16W
R 956	0104068	CHIP RESISTOR 270KOHM+-5% 1/16W
R 957	0104083	CHIP RESISTOR 33KOHM+-5% 1/16W
R 958	0104039	CHIP RESISTOR 1.5KOHM+-5% 1/16W
R 959	0104039	CHIP RESISTOR 1.5KOHM+-5% 1/16W
R 960	0104055	CHIP RESISTOR 22KOHM+-5% 1/16W
R 961	0104055	CHIP RESISTOR 22KOHM+-5% 1/16W
R 962	0104058	CHIP RESISTOR 47KOHM+-5% 1/16W
R 963	0104072	CHIP RESISTOR 470KOHM+-5% 1/16W
R 964	0104052	CHIP RESISTOR 12KOHM+-5% 1/16W
R 965	0104058	CHIP RESISTOR 47KOHM+-5% 1/16W
R 966	0104072	CHIP RESISTOR 470KOHM+-5% 1/16W
R 967	0104058	CHIP RESISTOR 47KOHM+-5% 1/16W
R 968	0104058	CHIP RESISTOR 47KOHM+-5% 1/16W
R 969	0104058	CHIP RESISTOR 47KOHM+-5% 1/16W
R 970	0104046	CHIP RESISTOR 4.7KOHM+-5% 1/16W
R 971	0104046	CHIP RESISTOR 4.7KOHM+-5% 1/16W
R 972	0104024	CHIP RESISTOR 100 OHM+-5% 1/16W

SYMBOL-NO	P-NO	DISCRIPTION
R 973	0104017	CHIP RESISTOR 33 OHM+-5% 1/16W
R 974	0104058	CHIP RESISTOR 47KOHM+-5% 1/16W
R 975	0104112	CHIP RESISTOR 47KOHM+-1% 0.1W
R 976	0104121	METAL FILM 27KOHM+-1% 1/10W
R 977	0103867	CHIP RESISTOR 100KOHM+-5% 0.1W
R 978	0103867	CHIP RESISTOR 100KOHM+-5% 0.1W
R 979	0104112	CHIP RESISTOR 47KOHM+-1% 0.1W
R 980	0104121	METAL FILM 27KOHM+-1% 1/10W
R 981	0104035	CHIP RESISTOR 680 OHM+-5% 1/16W
R 982	0104035	CHIP RESISTOR 680 OHM+-5% 1/16W
R 985	0104051	CHIP RESISTOR 10KOHM+-5% 1/16W
R 986	0104051	CHIP RESISTOR 10KOHM+-5% 1/16W
R 988	0104051	CHIP RESISTOR 10KOHM+-5% 1/16W
R 989	0104058	CHIP RESISTOR 47KOHM+-5% 1/16W
R 990	0104067	CHIP RESISTOR 220KOHM+-5% 1/16W
R 991	0104037	CHIP RESISTOR 1KOHM+-5% 1/16W
R 996	0104057	CHIP RESISTOR 39KOHM+-5% 1/16W
R 997	0104057	CHIP RESISTOR 39KOHM+-5% 1/16W
R 998	0104063	CHIP RESISTOR 100KOHM+-5% 1/16W
R 999	0104585	CHIP RESISTOR 100KOHM+-5% 1/32W
RT 120	0104175	CHIP RESISTOR 22KOHM+-10% 1/8W
RT 121	0104175	CHIP RESISTOR 22KOHM+-10% 1/8W
RT 123	0104145	CHIP RESISTOR 120 OHM+-10% 1/8W
RT 124	0104173	CHIP RESISTOR 15KOHM+-10% 1/8W
RT 125	0104176	CHIP RESISTOR 27KOHM+-10% 1/8W
RT 126	0104167	CHIP RESISTOR 5.6KOHM+-10% 1/8W
RT 128	0104158	CHIP RESISTOR 1.2KOHM+-10%1/8W
RT 129	0104162	CHIP RESISTOR 2.2KOHM 1/8W
RT 130	0104164	CHIP RESISTOR 3.3KOHM+-10% 1/8W
RT 131	0104157	CHIP RESISTOR 1KOHM+-10% 1/8W
RT 132	0104158	CHIP RESISTOR 1.2KOHM+-10%1/8W
RT 133	0104157	CHIP RESISTOR 1KOHM+-10% 1/8W
RT 134	0104157	CHIP RESISTOR 1KOHM+-10% 1/8W
RT 135	0104158	CHIP RESISTOR 1.2KOHM+-10%1/8W
RT 201	5040085	SEMI VARIABLE 5KOHM
RT 215	5040084	SEMI VARIABLE 2KOHM
D 001	5337354	DIODE MA133
D 002	5337354	DIODE MA133
D 051	5328303	DIODE MA152WK(MU)
D 052	5332151	DIODE DS135D
D 091	5382221	LED 462T3
D 201	5339181	DIODE HSM88S
D 204	5337041	DIODE MA159
D 205	5337353	DIODE MA132K
D 208	5337041	DIODE MA159
D 210	5337353	DIODE MA132K
D 211	5337041	DIODE MA159
D 212	5328302	DIODE MA151WA(MN)
D 213	5337421	DIODE DAN222
D 214	5337353	DIODE MA132K
D 901	5337352	DIODE MA132WA
D 902	5337421	DIODE DAN222
D 903	5337421	DIODE DAN222
D 904	5337352	DIODE MA132WA
D 905	5337422	DIODE DA221
D 906	5337352	DIODE MA132WA
D 907	5337421	DIODE DAN222
D 908	5337354	DIODE MA133
D 910	5337354	DIODE MA133
D 911	5337354	DIODE MA133
D 912	5337354	DIODE MA133
D 913	5337354	DIODE MA133
D 914	5337351	DIODE MA132WK
D 915	5337421	DIODE DAN222
IC 001L	1351051	IC NJM2107F

SYMBOL-NO	P-NO	DISCRIPTION
IC 201	1351971	IC CXA1207R
IC 202	1352001	IC CXA1208R
IC 203	1350041	IC HA118070FP
IC 204	1351942	IC CXL5502M
IC 206	1351211	IC HA118110FP
IC 207	1351211	IC HA118110FP
IC 209	1351221	IC HA118111FP
IC 210	1351221	IC HA118111FP
IC 211	1350401	IC NJM2234M
IC 601	1361811	IC CXA1204Q
IC 602	5355512	IC LM2904M
IC 603	5307052	IC LB1851
IC 604	5307052	IC LB1851
IC 605	5355571	IC NJM4556M
IC 901	1355454	IC CXP80116
IC 904	1351601	IC MM1028BF
IC 905	1354281	IC BR93C46F
IC 906	5304281	IC TA7291F
IC 907	5352723	IC LM2903M
IC 908	5355512	IC LM2904M
IC 909	1351063	IC MC147805.0
IC 910	5307001	IC S-8052ALRLF
IC 912	5355512	IC LM2904M
IC 915	5305832	IC 7S08
IC 916	5305822	IC 7S32
IC1001	5318281	CCD IMAGE DEVICE ICX026BK
Q 001L	5328972	TRANSISTOR 2SC2412K-BRT
Q 002L	5328972	TRANSISTOR 2SC2412K-BRT
Q 091	1322341	TRANSISTOR PT4810F
Q 092	5382141	PHOTO TRANSISTOR NJL5161K
Q 093	5382141	PHOTO TRANSISTOR NJL5161K
Q 094	1322341	TRANSISTOR PT4810F
Q 201	1323291	TRANSISTOR 2SC4617
Q 202	1323291	TRANSISTOR 2SC4617
Q 203	1323291	TRANSISTOR 2SC4617
Q 204	1323291	TRANSISTOR 2SC4617
Q 205	1323291	TRANSISTOR 2SC4617
Q 206	1323291	TRANSISTOR 2SC4617
Q 207	1323291	TRANSISTOR 2SC4617
Q 208	1323291	TRANSISTOR 2SC4617
Q 210	1323171	TRANSISTOR UN9213
Q 211	1323291	TRANSISTOR 2SC4617
Q 212	1323231	TRANSISTOR 2SB1462
Q 213	1323231	TRANSISTOR 2SB1462
Q 217	1323171	TRANSISTOR UN9213
Q 218	1323231	TRANSISTOR 2SB1462
Q 219	1323231	TRANSISTOR 2SB1462
Q 220	5326421	TRANSISTOR 2SC4081BR
Q 225	5326481	TRANSISTOR XN4401
Q 228	1323252	TRANSISTOR XP4501
Q 229	1323291	TRANSISTOR 2SC4617
Q 230	1323231	TRANSISTOR 2SB1462
Q 231	1323291	TRANSISTOR 2SC4617
Q 232	1323231	TRANSISTOR 2SB1462
Q 233	1323291	TRANSISTOR 2SC4617
Q 234	1323171	TRANSISTOR UN9213
Q 236	1323231	TRANSISTOR 2SB1462
Q 238	1323172	TRANSISTOR UN9113
Q 239	1323291	TRANSISTOR 2SC4617
Q 240	1323171	TRANSISTOR UN9213
Q 241	1323291	TRANSISTOR 2SC4617
Q 242	1323291	TRANSISTOR 2SC4617
Q 243	1323291	TRANSISTOR 2SC4617
Q 244	1323171	TRANSISTOR UN9213
Q 245	1323291	TRANSISTOR 2SC4617

SYMBOL-NO	P-NO	DISCRIPTION
Q 246	1323171	TRANSISTOR UN9213
Q 247	1323231	TRANSISTOR 2SB1462
Q 248	1323171	TRANSISTOR UN9213
Q 249	1323291	TRANSISTOR 2SC4617
Q 250	1323231	TRANSISTOR 2SB1462
Q 251	1323301	TRANSISTOR 2SB1219
Q 252	1323171	TRANSISTOR UN9213
Q 259	1323301	TRANSISTOR 2SB1219
Q 260	1323171	TRANSISTOR UN9213
Q 261	1323172	TRANSISTOR UN9113
Q 264	1323171	TRANSISTOR UN9213
Q 265	1323291	TRANSISTOR 2SC4617
Q 602	1323291	TRANSISTOR 2SC4617
Q 603	1323231	TRANSISTOR 2SB1462
Q 604	1323291	TRANSISTOR 2SC4617
Q 605	5326222	TRANSISTOR DTC363
Q 607	1323291	TRANSISTOR 2SC4617
Q 608	1323291	TRANSISTOR 2SC4617
Q 609	1323231	TRANSISTOR 2SB1462
Q 610	1323291	TRANSISTOR 2SC4617
Q 901	1323291	TRANSISTOR 2SC4617
Q 902	5326512	TRANSISTOR 2SB1188 (Q)
Q 903	1323291	TRANSISTOR 2SC4617
Q 905	5326206	TRANSISTOR FMC2
Q 908	1323271	TRANSISTOR DTC144EE
Q 909	1323172	TRANSISTOR UN9113
Q 910	1323291	TRANSISTOR 2SC4617
Q 911	1323291	TRANSISTOR 2SC4617
Q 914	1323171	TRANSISTOR UN9213
Q 915	1323171	TRANSISTOR UN9213
Q 916	1323171	TRANSISTOR UN9213
Q 917	1323231	TRANSISTOR 2SB1462
Q 918	1323231	TRANSISTOR 2SB1462
ZD 001	5339213	DIODE RD2.7MB2
ZD 902	5339213	DIODE RD2.7MB2
ZD 903	5328667	DIODE MA3043L
L 001	5159246	CHOKE COIL 10UH+-10%
L 201	0773132	CHOKE COIL 100UH+-5%
L 202	5159226	FILTER 47UH
L 203	0773062	CHOKE COIL 10UH+-10%
L 204	0773133	CHOKE COIL 120UH+-5%
L 205	0773136	CHOKE COIL 220UH+-5%
L 206	5159258	CHOKE COIL 2.7UH
L 207	5159253	CHOKE COIL 39UH
L 208	5159253	CHOKE COIL 39UH
L 209	5159248	CHOKE COIL 18UH
L 210	0773094	CHOKE COIL 100UH
L 211	0773092	CHOKE COIL 47UH+-10%
L 212	5159253	CHOKE COIL 39UH
L 213	0773062	CHOKE COIL 10UH+-10%
L 214	5159227	COIL 56UH
L 215	0773092	CHOKE COIL 47UH+-10%
L 216	0773132	CHOKE COIL 100UH+-5%
L 217	0773136	CHOKE COIL 220UH+-5%
L 218	0773133	CHOKE COIL 120UH+-5%
L 219	0773132	CHOKE COIL 100UH+-5%
L 220	5159249	CHOKE COIL 22UH+-10%
L 221	5159249	CHOKE COIL 22UH+-10%
L 222	0773135	CHOKE COIL 180UH+-5%
L 223	0773092	CHOKE COIL 47UH+-10%
L 225	5129271	CHOKE COIL 68UH
L 226	0773087	CHOKE COIL 10UH+-10%
L 227	5129271	CHOKE COIL 68UH
L 228	5129271	CHOKE COIL 68UH
L 229	5129271	CHOKE COIL 68UH

SYMBOL-NO	P-NO	DISCRIPTION
L 230	5129271	CHOKE COIL 68UH
L 231	5159251	CHOKE COIL 27UH+-10%
L 233	0773134	CHOKE COIL 150UH+-5%
L 234	5159249	CHOKE COIL 22UH+-10%
L 235	0773097	CHOKE COIL 330UH+-10%
L 236	5159256	COIL 180UH
L 237	0773054	CHOKE COIL 2.7UH+-10%
L 239	5159245	CHOKE COIL 6.8UH
L 240	5159227	COIL 56UH
L 243	0773097	CHOKE COIL 330UH+-10%
L 244	0773094	CHOKE COIL 100UH+-10%
L 245	0773094	CHOKE COIL 100UH+-10%
L 601	0773094	CHOKE COIL 100UH+-10%
L 602	0773097	CHOKE COIL 330UH+-10%
L 603	0773094	CHOKE COIL 100UH+-10%
L 604	0773097	CHOKE COIL 330UH+-10%
L 901	0773092	CHOKE COIL 47UH+-10%
L 902	0773094	CHOKE COIL 100UH+-10%
L 903	0773087	CHOKE COIL 10UH+-10%
L 906	0773092	CHOKE COIL 47UH+-10%
X 201	5778421	CRYSTAL
X 601	5778361	CRYSTAL
X 901	5778351	CRYSTAL
CP 201	5172522	FILTER, LOW PASS
CP 202	5172521	FILTER, LOW PASS
CP 203	5170131	FILTER, HIGH PASS
CP 204	5172531	FILTER, BAND PASS
CP 205	5172512	FILTER, BAND PASS
CP 206	5148231	CHOKE COIL
CP 207	5172523	DELY LINE
CP 209	5172474	TRAP, COIL
CP 210	5172493	TRAP, COIL
F 051	5721838	FUSE 1.6A
F 052	5721838	FUSE 1.6A
F 053	5721838	FUSE 1.6A
S 091	5635461	SWITCH
S 092	5635451	SWITCH
S 093	5635481	SWITCH
SW 001	5622561	SWITCH
J 001	5674492	JACK
CT1201	5058576	CAPACTOR TRIMMER

CAMERA SECTION

SYMBOL-NO	P-NO	DISCRIPTION
C1001	0202146	CERAMIC CHIP 1.0UF+80-20% 16V
C1002	0202129	CERAMIC CHIP 0.022UF+80-20% 25V
C1004	0202129	CERAMIC CHIP 0.022UF+80-20% 25V
C1005	0202162	CERAMIC CHIP 0.47UF+80-20% 16V
C1006	0202129	CERAMIC CHIP 0.022UF+80-20% 25V
C1008	0202127	CERAMIC CHIP 0.01UF+80-20% 50V
C1009	0202127	CERAMIC CHIP 0.01UF+80-20% 50V
C1012	0202098	CERAMIC CHIP 0.1UF+80-20% 16V
C1015	0202098	CERAMIC CHIP 0.1UF+80-20% 16V
C1016	0202127	CERAMIC CHIP 0.01UF+80-20% 50V
C1017	0202045	CERAMIC DISC 22PF+-5% 50V
C1018	0202057	CERAMIC CHIP 180PF+-5% 50V
C1020	0202098	CERAMIC CHIP 0.1UF+80-20% 16V
C1021	0202098	CERAMIC CHIP 0.1UF+80-20% 16V
C1023	0202098	CERAMIC CHIP 0.1UF+80-20% 16V
C1024	0202098	CERAMIC CHIP 0.1UF+80-20% 16V
C1025	0202098	CERAMIC CHIP 0.1UF+80-20% 16V
C1026	0202098	CERAMIC CHIP 0.1UF+80-20% 16V
C1210	0202146	CERAMIC CHIP 1.0UF+80-20% 16V
C1215	0202146	CERAMIC CHIP 1.0UF+80-20% 16V
C1217	0202146	CERAMIC CHIP 1.0UF+80-20% 16V
C1221	0202083	CERAMIC CHIP 10PF+-0.5% 50V

SYMBOL-NO	P-NO	DISCRIPTION
C1301	0202098	CERAMIC CHIP 0.1UF+80-20% 16V
C1302	0202098	CERAMIC CHIP 0.1UF+80-20% 16V
C1304	0202127	CERAMIC CHIP 0.01UF+80-20% 50V
C1305	0202098	CERAMIC CHIP 0.1UF+80-20% 16V
C1306	0202098	CERAMIC CHIP 0.1UF+80-20% 16V
C1308	0202057	CERAMIC CHIP 180PF+-5% 50V
C1310	0202098	CERAMIC CHIP 0.1UF+80-20% 16V
C1313	0202044	CERAMIC CHIP 18PF+-5% 50V
C1315	0202049	CERAMIC DISC 47PF+-5% 50V
C1316	0202049	CERAMIC DISC 47PF+-5% 50V
C1318	0202098	CERAMIC CHIP 0.1UF+80-20% 16V
C1319	0202049	CERAMIC DISC 47PF+-5% 50V
C1320	0202049	CERAMIC DISC 47PF+-5% 50V
C1321	0202049	CERAMIC DISC 47PF+-5% 50V
C1322	0202049	CERAMIC DISC 47PF+-5% 50V
C1323	0202049	CERAMIC DISC 47PF+-5% 50V
C1324	0202109	CERAMIC CHIP 1000PF+-10% 50V
C1325	0202096	CERAMIC CHIP 0.047UF+80-20% 16V
C1326	0202098	CERAMIC CHIP 0.1UF+80-20% 16V
C1327	0202091	CERAMIC CHIP 39PF+-5% 50V
C1328	0202054	CERAMIC CHIP 100PF+-5% 50V
C1329	0202098	CERAMIC CHIP 0.1UF+80-20% 16V
C1330	0202098	CERAMIC CHIP 0.1UF+80-20% 16V
C1331	0202098	CERAMIC CHIP 0.1UF+80-20% 16V
C1334	0202098	CERAMIC CHIP 0.1UF+80-20% 16V
C1335	0202098	CERAMIC CHIP 0.1UF+80-20% 16V
C1336	0202098	CERAMIC CHIP 0.1UF+80-20% 16V
C1338	0202098	CERAMIC CHIP 0.1UF+80-20% 16V
C1339	0202098	CERAMIC CHIP 0.1UF+80-20% 16V
C1341	0202127	CERAMIC CHIP 0.01UF+80-20% 50V
C1342	0202098	CERAMIC CHIP 0.1UF+80-20% 16V
C1343	0202098	CERAMIC CHIP 0.1UF+80-20% 16V
C1344	0202127	CERAMIC CHIP 0.01UF+80-20% 50V
C1346	0202098	CERAMIC CHIP 0.1UF+80-20% 16V
C1347	0202098	CERAMIC CHIP 0.1UF+80-20% 16V
C1348	0202162	CERAMIC CHIP 0.47UF+80-20% 16V
C1349	0202162	CERAMIC CHIP 0.47UF+80-20% 16V
C1350	0202162	CERAMIC CHIP 0.47UF+80-20% 16V
C1351	0202098	CERAMIC CHIP 0.1UF+80-20% 16V
C1352	0202098	CERAMIC CHIP 0.1UF+80-20% 16V
C1354	0209969	CERAMIC CHIP 0.1UF+80-20% 25V
C1355	0202098	CERAMIC CHIP 0.1UF+80-20% 16V
C1356	0202098	CERAMIC CHIP 0.1UF+80-20% 16V
C1357	0202098	CERAMIC CHIP 0.1UF+80-20% 16V
C1358	0202098	CERAMIC CHIP 0.1UF+80-20% 16V
C1359	0202098	CERAMIC CHIP 0.1UF+80-20% 16V
C1361	0202098	CERAMIC CHIP 0.1UF+80-20% 16V
C1363	0202129	CERAMIC CHIP 0.022UF+80-20% 25V
C1364	0202127	CERAMIC CHIP 0.01UF+80-20% 50V
C1366	0202129	CERAMIC CHIP 0.022UF+80-20% 25V
C1367	0202087	CERAMIC CHIP 22PF+-5% 50V
C1368	0202098	CERAMIC CHIP 0.1UF+80-20% 16V
C1369	0202098	CERAMIC CHIP 0.1UF+80-20% 16V
C1370	0202098	CERAMIC CHIP 0.1UF+80-20% 16V
C1371	0202098	CERAMIC CHIP 0.1UF+80-20% 16V
C1372	0202127	CERAMIC CHIP 0.01UF+80-20% 50V
C1373	0202098	CERAMIC CHIP 0.1UF+80-20% 16V
C1374	0202127	CERAMIC CHIP 0.01UF+80-20% 50V
C1375	0202098	CERAMIC CHIP 0.1UF+80-20% 16V
C1376	0202098	CERAMIC CHIP 0.1UF+80-20% 16V
C1377	0202098	CERAMIC CHIP 0.1UF+80-20% 16V
C1380	0202127	CERAMIC CHIP 0.01UF+80-20% 50V
C1381	0202098	CERAMIC CHIP 0.1UF+80-20% 16V
C1383	0202098	CERAMIC CHIP 0.1UF+80-20% 16V
C1384	0202098	CERAMIC CHIP 0.1UF+80-20% 16V

SYMBOL-NO	P-NO	DISCRIPTION
C1385	0202098	CERAMIC CHIP 0.1UF+80-20% 16V
C1386	0202098	CERAMIC CHIP 0.1UF+80-20% 16V
C1387	0202098	CERAMIC CHIP 0.1UF+80-20% 16V
C1388	0202098	CERAMIC CHIP 0.1UF+80-20% 16V
C1389	0202098	CERAMIC CHIP 0.1UF+80-20% 16V
C1390	0202098	CERAMIC CHIP 0.1UF+80-20% 16V
C1391	0202098	CERAMIC CHIP 0.1UF+80-20% 16V
C1394	0202098	CERAMIC CHIP 0.1UF+80-20% 16V
C1395	0202098	CERAMIC CHIP 0.1UF+80-20% 16V
C1397	0202076	CERAMIC CHIP 4PF+-0.25PF 50V
C1398	0202076	CERAMIC CHIP 4PF+-0.25PF 50V
C1401	0202098	CERAMIC CHIP 0.1UF+80-20% 16V
C1402	0202098	CERAMIC CHIP 0.1UF+80-20% 16V
C1403	0202098	CERAMIC CHIP 0.1UF+80-20% 16V
C1404	0202098	CERAMIC CHIP 0.1UF+80-20% 16V
C1951	0202109	CERAMIC CHIP 1000PF+-10% 50V
C1952	0202129	CERAMIC CHIP 0.022UF+80-20% 25V
C1953	0202098	CERAMIC CHIP 0.1UF+80-20% 16V
C1957	0202089	CHIP CERAMIC 33PF+-5% 50V
C1958	0202085	CHIP CERAMIC 15PF+-5% 50V
C1959	0202098	CERAMIC CHIP 0.1UF+80-20% 16V
C1964	0202098	CERAMIC CHIP 0.1UF+80-20% 16V
RT1201	5040088	SEMI VARIABLE 50KOHM
RT1202	5040086	SEMI VARIABLE 10KOHM
RT1203	5040088	SEMI VARIABLE 50KOHM
RT1204	5040088	SEMI VARIABLE 50KOHM
RT1205	5040084	SEMI VARIABLE 2KOHM
RT1209	5040086	SEMI VARIABLE 10KOHM
RT1210	5040085	SEMI VARIABLE 5KOHM
RT1211	5040087	SEMI VARIABLE 20KOHM
RT1213	5040089	SEMI VARIABLE 100KOHM
RT1214	5040089	SEMI VARIABLE 100KOHM
RT1215	5040089	SEMI VARIABLE 100KOHM
R1001	0104066	CHIP RESISTOR 180KOHM+-5% 1/16W
R1002	0104056	CHIP RESISTOR 27KOHM+-5% 1/16W
R1003	0104055	CHIP RESISTOR 22KOHM+-5% 1/16W
R1004	0104011	CHIP RESISTOR 10 OHM+-5% 1/16W
R1005	0104011	CHIP RESISTOR 10 OHM+-5% 1/16W
R1006	0104035	CHIP RESISTOR 680 OHM+-5% 1/16W
R1007	0104033	CHIP RESISTOR 470 OHM+-5% 1/16W
R1008	0104024	CHIP RESISTOR 100 OHM+-5% 1/16W
R1009	0104048	CHIP RESISTOR 6.8KOHM+-5% 1/16W
R1010	0104063	CHIP RESISTOR 100KOHM+-5% 1/16W
R1011	0104057	CHIP RESISTOR 39KOHM+-5% 1/16W
R1012	0104063	CHIP RESISTOR 100KOHM+-5% 1/16W
R1013	0104076	CHIP RESISTOR 1000KOHM+-5% 1/16W
R1015	0104013	CHIP RESISTOR 15 OHM+-5% 1/16W
R1016	0104061	CHIP RESISTOR 68KOHM+-5% 1/16W
R1017	0104052	CHIP RESISTOR 12KOHM+-5% 1/16W
R1018	0104053	CHIP RESISTOR 15KOHM+-5% 1/16W
R1019	0104083	CHIP RESISTOR 33KOHM+-5% 1/16W
R1020	0104076	CHIP RESISTOR 1000KOHM+-5% 1/16W
R1021	0104057	CHIP RESISTOR 39KOHM+-5% 1/16W
R1022	0104067	CHIP RESISTOR 220KOHM+-5% 1/16W
R1023	0104068	CHIP RESISTOR 270KOHM+-5% 1/16W
R1201	0104063	CHIP RESISTOR 100KOHM+-5% 1/16W
R1202	0104047	CHIP RESISTOR 5.6KOHM+-5% 1/16W
R1203	0104048	CHIP RESISTOR 6.8KOHM+-5% 1/16W
R1204	0104083	CHIP RESISTOR 33KOHM+-5% 1/16W
R1205	0104053	CHIP RESISTOR 15KOHM+-5% 1/16W
R1206	0104042	CHIP RESISTOR 2.2KOHM+-5% 1/16W
R1207	0104055	CHIP RESISTOR 22KOHM+-5% 1/16W
R1208	0104043	CHIP RESISTOR 2.7KOHM+-5% 1/16W
R1209	0104044	CHIP RESISTOR 3.3KOHM+-5% 1/16W
R1210	0104042	CHIP RESISTOR 2.2KOHM+-5% 1/16W

SYMBOL-NO	P-NO	DISCRIPTION
R1211	0104058	CHIP RESISTOR 47KOHM+-5% 1/16W
R1212	0104028	CHIP RESISTOR 220 OHM+-5% 1/16W
R1213	0104044	CHIP RESISTOR 3.3KOHM+-5% 1/16W
R1214	0104051	CHIP RESISTOR 10KOHM+-5% 1/16W
R1216	0104046	CHIP RESISTOR 4.7KOHM+-5% 1/16W
R1217	0104052	CHIP RESISTOR 12KOHM+-5% 1/16W
R1218	0104042	CHIP RESISTOR 2.2KOHM+-5% 1/16W
R1219	0104042	CHIP RESISTOR 2.2KOHM+-5% 1/16W
R1222	0104024	CHIP RESISTOR 100 OHM+-5% 1/16W
R1224	0104031	CHIP RESISTOR 330 OHM+-5% 1/16W
R1225	0104042	CHIP RESISTOR 2.2KOHM+-5% 1/16W
R1226	0104043	CHIP RESISTOR 2.7KOHM+-5% 1/16W
R1227	0104066	CHIP RESISTOR 180KOHM+-5% 1/16W
R1228	0104055	CHIP RESISTOR 22KOHM+-5% 1/16W
R1229	0104063	CHIP RESISTOR 100KOHM+-5% 1/16W
R1231	0104034	CHIP RESISTOR 560 OHM+-5% 1/16W
R1232	0104053	CHIP RESISTOR 15KOHM+-5% 1/16W
R1233	0104054	CHIP RESISTOR 18KOHM+-5% 1/16W
R1234	0104059	CHIP RESISTOR 56KOHM+-5% 1/16W
R1235	0104061	CHIP RESISTOR 68KOHM+-5% 1/16W
R1236	0104045	CHIP RESISTOR 3.9KOHM+-5% 1/16W
R1237	0104048	CHIP RESISTOR 6.8KOHM+-5% 1/16W
R1239	0104052	CHIP RESISTOR 12KOHM+-5% 1/16W
R1240	0104046	CHIP RESISTOR 4.7KOHM+-5% 1/16W
R1241	0104037	CHIP RESISTOR 1KOHM+-5% 1/16W
R1242	0104044	CHIP RESISTOR 3.3KOHM+-5% 1/16W
R1243	0104049	CHIP RESISTOR 8.2KOHM+-5% 1/16W
R1244	0104051	CHIP RESISTOR 10KOHM+-5% 1/16W
R1245	0104037	CHIP RESISTOR 1KOHM+-5% 1/16W
R1248	0104047	CHIP RESISTOR 5.6KOHM+-5% 1/16W
R1249	0104047	CHIP RESISTOR 5.6KOHM+-5% 1/16W
R1250	0104047	CHIP RESISTOR 5.6KOHM+-5% 1/16W
R1251	0104047	CHIP RESISTOR 5.6KOHM+-5% 1/16W
R1252	0104033	CHIP RESISTOR 470 OHM+-5% 1/16W
R1253	0104049	CHIP RESISTOR 8.2KOHM+-5% 1/16W
R1254	0104045	CHIP RESISTOR 3.9KOHM+-5% 1/16W
R1255	0104039	CHIP RESISTOR 1.5KOHM+-5% 1/16W
R1256	0104039	CHIP RESISTOR 1.5KOHM+-5% 1/16W
R1257	0104045	CHIP RESISTOR 3.9KOHM+-5% 1/16W
R1258	0104044	CHIP RESISTOR 3.3KOHM+-5% 1/16W
R1259	0104042	CHIP RESISTOR 2.2KOHM+-5% 1/16W
R1260	0104041	CHIP RESISTOR 1.8KOHM+-5% 1/16W
R1261	0104044	CHIP RESISTOR 3.3KOHM+-5% 1/16W
R1262	0104021	CHIP RESISTOR 56 OHM+-5% 1/16W
R1263	0104038	CHIP RESISTOR 1.2KOHM+-5% 1/16W
R1264	0104037	CHIP RESISTOR 1KOHM+-5% 1/16W
R1266	0104506	CHIP RESITOR 1.27KOHM+-1% 1/16W
R1267	0104531	CHIP RESISTOR 78.7KOHM+-1% 1/16W
R1268	0104039	CHIP RESISTOR 1.5KOHM+-5% 1/16W
R1270	0104513	CHIP RESISTOR 1.87KHOM+-1% 1/16W
R1271	0104516	CHIP RESISTOR 2.05KOHM+-1% 1/16W
R1272	0104525	CHIP RESISTOR 5.62KOHM+-1% 1/16W
R1273	0104525	CHIP RESISTOR 5.62KOHM+-1% 1/16W
R1274	0104511	CHIP RESISTOR 1.54KOHM+-1% 1/16W
R1275	0104505	CHIP RESITOR 1.15KOHM+-1% 1/16W
R1276	0104528	CHIP RESISTOR 10.5KOHM+-1% 1/16W
R1277	0104523	CHIP RESISTOR 4.99KOHM+1% 1/16W
R1278	0104507	CHIP RESITOR 1.3KOHM+-1% 1/16W
R1279	0104513	CHIP RESISTOR 1.87KHOM+-1% 1/16W
R1280	0104051	CHIP RESISTOR 10KOHM+-5% 1/16W
R1281	0104058	CHIP RESISTOR 47KOHM+-5% 1/16W
R1282	0104055	CHIP RESISTOR 22KOHM+-5% 1/16W
R1283	0104053	CHIP RESISTOR 15KOHM+-5% 1/16W
R1284	0104051	CHIP RESISTOR 10KOHM+-5% 1/16W
R1285	0104047	CHIP RESISTOR 5.6KOHM+-5% 1/16W

SYMBOL-NO	P-NO	DISCRIPTION
R1286	0104047	CHIP RESISTOR 5.6KOHM+-5% 1/16W
R1287	0104042	CHIP RESISTOR 2.2KOHM+-5% 1/16W
R1288	0104047	CHIP RESISTOR 5.6KOHM+-5% 1/16W
R1289	0104021	CHIP RESISTOR 56 OHM+-5% 1/16W
R1290	0104047	CHIP RESISTOR 5.6KOHM+-5% 1/16W
R1291	0104048	CHIP RESISTOR 6.8KOHM+-5% 1/16W
R1292	0104047	CHIP RESISTOR 5.6KOHM+-5% 1/16W
R1294	0104021	CHIP RESISTOR 56 OHM+-5% 1/16W
R1295	0104047	CHIP RESISTOR 5.6KOHM+-5% 1/16W
R1299	0104051	CHIP RESISTOR 10KOHM+-5% 1/16W
R1301	0104043	CHIP RESISTOR 2.7KOHM+-5% 1/16W
R1305	0104066	CHIP RESISTOR 180KOHM+-5% 1/16W
R1308	0104052	CHIP RESISTOR 12KOHM+-5% 1/16W
R1309	0104045	CHIP RESISTOR 3.9KOHM+-5% 1/16W
R1310	0104051	CHIP RESISTOR 10KOHM+-5% 1/16W
R1311	0104057	CHIP RESISTOR 39KOHM+-5% 1/16W
R1313	0104043	CHIP RESISTOR 2.7KOHM+-5% 1/16W
R1314	0104037	CHIP RESISTOR 1KOHM+-5% 1/16W
R1315	0104055	CHIP RESISTOR 22KOHM+-5% 1/16W
R1316	0104035	CHIP RESISTOR 680 OHM+-5% 1/16W
R1317	0104053	CHIP RESISTOR 15KOHM+-5% 1/16W
R1318	0104062	CHIP RESISTOR 82KOHM+-5% 1/16W
R1319	0104053	CHIP RESISTOR 15KOHM+-5% 1/16W
R1320	0104055	CHIP RESISTOR 22KOHM+-5% 1/16W
R1321	0104035	CHIP RESISTOR 680 OHM+-5% 1/16W
R1322	0104083	CHIP RESISTOR 33KOHM+-5% 1/16W
R1324	0104044	CHIP RESISTOR 3.3KOHM+-5% 1/16W
R1325	0104048	CHIP RESISTOR 6.8KOHM+-5% 1/16W
R1326	0104055	CHIP RESISTOR 22KOHM+-5% 1/16W
R1327	0104058	CHIP RESISTOR 47KOHM+-5% 1/16W
R1328	0104064	CHIP RESISTOR 120KOHM+-5% 1/16W
R1329	0104065	CHIP RESISTOR 150KOHM+-5% 1/16W
R1330	0104058	CHIP RESISTOR 47KOHM+-5% 1/16W
R1332	0104046	CHIP RESISTOR 4.7KOHM+-5% 1/16W
R1335	0104053	CHIP RESISTOR 15KOHM+-5% 1/16W
R1337	0104059	CHIP RESISTOR 56KOHM+-5% 1/16W
R1338	0104055	CHIP RESISTOR 22KOHM+-5% 1/16W
R1339	0104065	CHIP RESISTOR 150KOHM+-5% 1/16W
R1341	0104039	CHIP RESISTOR 1.5KOHM+-5% 1/16W
R1342	0104076	CHIP RESISTOR 1000KOHM+-5% 1/16W
R1343	0104037	CHIP RESISTOR 1KOHM+-5% 1/16W
R1345	0104044	CHIP RESISTOR 3.3KOHM+-5% 1/16W
R1346	0104048	CHIP RESISTOR 6.8KOHM+-5% 1/16W
R1348	0104024	CHIP RESISTOR 100 OHM+-5% 1/16W
R1349	0104051	CHIP RESISTOR 10KOHM+-5% 1/16W
R1350	0104051	CHIP RESISTOR 10KOHM+-5% 1/16W
R1351	0104063	CHIP RESISTOR 100KOHM+-5% 1/16W
R1353	0104045	CHIP RESISTOR 3.9KOHM+-5% 1/16W
R1354	0104045	CHIP RESISTOR 3.9KOHM+-5% 1/16W
R1355	0104074	CHIP RESISTOR 680KOHM+-5% 1/16W
R1358	0104049	CHIP RESISTOR 8.2KOHM+-5% 1/16W
R1359	0104525	CHIP RESISTOR 5.62KOHM+-1% 1/16W
R1360	0104525	CHIP RESISTOR 5.62KOHM+-% 1/16W
R1361	0104046	CHIP RESISTOR 4.7KOHM+-5% 1/16W
R1362	0104029	CHIP RESISTOR 270 OHM+-5% 1/16W
R1363	0104073	CHIP RESISTOR 560KOHM+-5% 1/16W
R1364	0104063	CHIP RESISTOR 100KOHM+-5% 1/16W
R1365	0104052	CHIP RESISTOR 12KOHM+-5% 1/16W
R1371	0104021	CHIP RESISTOR 56 OHM+-5% 1/16W
R1372	0104042	CHIP RESISTOR 2.2KOHM+-5% 1/16W
R1373	0104021	CHIP RESISTOR 56 OHM+-5% 1/16W
R1374	0104042	CHIP RESISTOR 2.2KOHM+-5% 1/16W
R1375	0104044	CHIP RESISTOR 3.3KOHM+-5% 1/16W
R1376	0104036	CHIP RESISTOR 820 OHM+-5% 1/16W
R1377	0104041	CHIP RESISTOR 1.8KOHM+-5% 1/16W

SYMBOL-NO	P-NO	DISCRIPTION
R1378	0104052	CHIP RESISTOR 12KOHM+-5% 1/16W
R1379	0104036	CHIP RESISTOR 820 OHM+-5% 1/16W
R1380	0104068	CHIP RESISTOR 270KOHM+-5% 1/16W
R1381	0104043	CHIP RESISTOR 2.7KOHM+-5% 1/16W
R1382	0104068	CHIP RESISTOR 270KOHM+-5% 1/16W
R1384	0104046	CHIP RESISTOR 4.7KOHM+-5% 1/16W
R1387	0104051	CHIP RESISTOR 10KOHM+-5% 1/16W
R1388	0104047	CHIP RESISTOR 5.6KOHM+-5% 1/16W
R1389	0104047	CHIP RESISTOR 5.6KOHM+-5% 1/16W
R1390	0104044	CHIP RESISTOR 3.3KOHM+-5% 1/16W
R1391	0104041	CHIP RESISTOR 1.8KOHM+-5% 1/16W
R1394	0104054	CHIP RESISTOR 18KOHM+-5% 1/16W
R1395	0104042	CHIP RESISTOR 2.2KOHM+-5% 1/16W
R1396	0104037	CHIP RESISTOR 1KOHM+-5% 1/16W
R1397	0104048	CHIP RESISTOR 6.8KOHM+-5% 1/16W
R1398	0104039	CHIP RESISTOR 1.5KOHM+-5% 1/16W
R1399	0104057	CHIP RESISTOR 39KOHM+-5% 1/16W
R1400	0104033	CHIP RESISTOR 470 OHM+-5% 1/16W
R1401	0104053	CHIP RESISTOR 15KOHM+-5% 1/16W
R1402	0104053	CHIP RESISTOR 15KOHM+-5% 1/16W
R1403	0104074	CHIP RESISTOR 680KOHM+-5% 1/16W
R1404	0104037	CHIP RESISTOR 1KOHM+-5% 1/16W
R1405	0104056	CHIP RESISTOR 27KOHM+-5% 1/16W
R1406	0104056	CHIP RESISTOR 27KOHM+-5% 1/16W
R1407	0104521	CHIP RESISTOR 4.12KOHM+-1% 1/16W
R1408	0104527	CHIP RESISTOR 8.25KOHM+-1% 1/16W
R1409	0104042	CHIP RESISTOR 2.2KOHM+-5% 1/16W
R1410	0104021	CHIP RESISTOR 56 OHM+-5% 1/16W
R1411	0104038	CHIP RESISTOR 1.2KOHM+-5% 1/16W
R1412	0104083	CHIP RESISTOR 33KOHM+-5% 1/16W
R1413	0104044	CHIP RESISTOR 3.3KOHM+-5% 1/16W
R1414	0104034	CHIP RESISTOR 560 OHM+-5% 1/16W
R1415	0104042	CHIP RESISTOR 2.2KOHM+-5% 1/16W
R1416	0104047	CHIP RESISTOR 5.6KOHM+-5% 1/16W
R1417	0104049	CHIP RESISTOR 8.2KOHM+-5% 1/16W
R1418	0104052	CHIP RESISTOR 12KOHM+-5% 1/16W
R1419	0104021	CHIP RESISTOR 56 OHM+-5% 1/16W
R1421	0104059	CHIP RESISTOR 56KOHM+-5% 1/16W
R1422	0104057	CHIP RESISTOR 39KOHM+-5% 1/16W
R1423	0104052	CHIP RESISTOR 12KOHM+-5% 1/16W
R1424	0104042	CHIP RESISTOR 2.2KOHM+-5% 1/16W
R1425	0104028	CHIP RESISTOR 220 OHM+-5% 1/16W
R1426	0104042	CHIP RESISTOR 2.2KOHM+-5% 1/16W
R1427	0104026	CHIP RESISTOR 150 OHM+-5% 1/16W
R1428	0104065	CHIP RESISTOR 150KOHM+-5% 1/16W
R1429	0104051	CHIP RESISTOR 10KOHM+-5% 1/16W
R1430	0104536	CHIP RESISTOR 3KOHM+-1% 1/16W
R1431	0104511	CHIP RESISTOR 1.54KOHM+-1% 1/16W
R1440	0104528	CHIP RESISTOR 10.5KOHM+-1% 1/16W
R1441	0104031	CHIP RESISTOR 330 OHM+-5% 1/16W
R1442	0104524	CHIP RESISTOR 5.49KOHM+-1% 1/16W
R1443	0104063	CHIP RESISTOR 100KOHM+-5% 1/16W
R1444	0104051	CHIP RESISTOR 10KOHM+-5% 1/16W
R1445	0104063	CHIP RESISTOR 100KOHM+-5% 1/16W
R1446	0104051	CHIP RESISTOR 10KOHM+-5% 1/16W
R1447	0104045	CHIP RESISTOR 3.9KOHM+-5% 1/16W
R1448	0104045	CHIP RESISTOR 3.9KOHM+-5% 1/16W
R1450	0104058	CHIP RESISTOR 47KOHM+-5% 1/16W
R1452	0104055	CHIP RESISTOR 22KOHM+-5% 1/16W
R1453	0104051	CHIP RESISTOR 10KOHM+-5% 1/16W
R1455	0104015	CHIP RESISTOR 22 OHM+-5% 1/16W
R1456	0104084	CHIP RESISTOR 2.2MOHM+-5% 1/16W
R1457	0104084	CHIP RESISTOR 2.2MOHM+-5% 1/16W
R1458	0104084	CHIP RESISTOR 2.2MOHM+-5% 1/16W
R1459	0104084	CHIP RESISTOR 2.2MOHM+-5% 1/16W

SYMBOL-NO	P-NO	DISCRIPTION
R1460	0104084	CHIP RESISTOR 2.2MOHM+-5% 1/16W
R1461	0104084	CHIP RESISTOR 2.2MOHM+-5% 1/16W
R1462	0104049	CHIP RESISTOR 8.2KOHM+-5% 1/16W
R1463	0104045	CHIP RESISTOR 3.9KOHM+-5% 1/16W
R1464	0104052	CHIP RESISTOR 12KOHM+-5% 1/16W
R1466	0104064	CHIP RESISTOR 120KOHM+-5% 1/16W
R1467	0104064	CHIP RESISTOR 120KOHM+-5% 1/16W
R1468	0104058	CHIP RESISTOR 47KOHM+-5% 1/16W
R1469	0104042	CHIP RESISTOR 2.2KOHM+-5% 1/16W
R1472	0104058	CHIP RESISTOR 47KOHM+-5% 1/16W
R1473	0104046	CHIP RESISTOR 4.7KOHM+-5% 1/16W
R1474	0104039	CHIP RESISTOR 1.5KOHM+-5% 1/16W
R1475	0104063	CHIP RESISTOR 100KOHM+-5% 1/16W
R1476	0104038	CHIP RESISTOR 1.2KOHM+-5% 1/16W
R1477	0104083	CHIP RESISTOR 33KOHM+-5% 1/16W
R1478	0104043	CHIP RESISTOR 2.7KOHM+-5% 1/16W
R1479	0104043	CHIP RESISTOR 2.7KOHM+-5% 1/16W
R1480	0104037	CHIP RESISTOR 1KOHM+-5% 1/16W
R1481	0104025	CHIP RESISTOR 120 OHM+-5% 1/16W
R1482	0104043	CHIP RESISTOR 2.7KOHM+-5% 1/16W
R1483	0104042	CHIP RESISTOR 2.2KOHM+-5% 1/16W
R1488	0104083	CHIP RESISTOR 33KOHM+-5% 1/16W
R1489	0104042	CHIP RESISTOR 2.2KOHM+-5% 1/16W
R1901	0104053	CHIP RESISTOR 15KOHM+-5% 1/16W
R1902	0104058	CHIP RESISTOR 47KOHM+-5% 1/16W
R1903	0104051	CHIP RESISTOR 10KOHM+-5% 1/16W
R1904	0104037	CHIP RESISTOR 1KOHM+-5% 1/16W
R1905	0104053	CHIP RESISTOR 15KOHM+-5% 1/16W
R1906	0104057	CHIP RESISTOR 39KOHM+-5% 1/16W
R1909	0104037	CHIP RESISTOR 1KOHM+-5% 1/16W
R1910	0104584	CHIP RESISTOR 47KOHM+-5% 1/32W
R1912	0104581	CHIP RESISTOR 1KOHM+-5% 1/32W
R1913	0104037	CHIP RESISTOR 1KOHM+-5% 1/16W
R1914	0104581	CHIP RESISTOR 1KOHM+-5% 1/32W
R1915	0104581	CHIP RESISTOR 1KOHM+-5% 1/32W
R1916	0104031	CHIP RESISTOR 330 OHM+-5% 1/16W
R1917	0104584	CHIP RESISTOR 47KOHM+-5% 1/32W
R1918	0104584	CHIP RESISTOR 47KOHM+-5% 1/32W
R1921	0104076	CHIP RESISTOR 1000KOHM+-5% 1/16W
R1922	0104076	CHIP RESISTOR 1000KOHM+-5% 1/16W
R1923	0104076	CHIP RESISTOR 1000KOHM+-5% 1/16W
R1924	0104076	CHIP RESISTOR 1000KOHM+-5% 1/16W
R1925	0104076	CHIP RESISTOR 1000KOHM+-5% 1/16W
R1926	0104076	CHIP RESISTOR 1000KOHM+-5% 1/16W
R1927	0104076	CHIP RESISTOR 1000KOHM+-5% 1/16W
R1928	0104076	CHIP RESISTOR 1000KOHM+-5% 1/16W
R1929	0104017	CHIP RESISTOR 33 OHM+-5% 1/16W
R1931	0104581	CHIP RESISTOR 1KOHM+-5% 1/32W
R1933	0104581	CHIP RESISTOR 1KOHM+-5% 1/32W
R1935	0104051	CHIP RESISTOR 10KOHM+-5% 1/16W
R1936	0104072	CHIP RESISTOR 470KOHM+-5% 1/16W
R1942	0104071	CHIP RESISTOR 390KOHM+-5% 1/16W
R1943	0104583	CHIP RESISTOR 10KOHM+-5% 1/32W
R1945	0104037	CHIP RESISTOR 1KOHM+-5% 1/16W
R1946	0104525	CHIP RESISTOR 5.62KOHM+-1% 1/16W
R1955	0104051	CHIP RESISTOR 10KOHM+-5% 1/16W
R1956	0104051	CHIP RESISTOR 10KOHM+-5% 1/16W
R1957	0104583	CHIP RESISTOR 10KOHM+-5% 1/32W
R1958	0104583	CHIP RESISTOR 10KOHM+-5% 1/32W
R1959	0104581	CHIP RESISTOR 1KOHM+-5% 1/32W
R1960	0104058	CHIP RESISTOR 47KOHM+-5% 1/16W
R1961	0104058	CHIP RESISTOR 47KOHM+-5% 1/16W
R1962	0104037	CHIP RESISTOR 1KOHM+-5% 1/16W
R1965	0104051	CHIP RESISTOR 10KOHM+-5% 1/16W
R1967	0104037	CHIP RESISTOR 1KOHM+-5% 1/16W

SYMBOL-NO	P-NO	DISCRIPTION
R1968	0104051	CHIP RESISTOR 10KOHM+-5% 1/16W
R1969	0104037	CHIP RESISTOR 1KOHM+-5% 1/16W
R1970	0104033	CHIP RESISTOR 470 OHM+-5% 1/16W
R1971	0104037	CHIP RESISTOR 1KOHM+-5% 1/16W
R1972	0104024	CHIP RESISTOR 100 OHM+-5% 1/16W
D1001	5337353	DIODE MA132K
D1002	5337353	DIODE MA132K
D1003	5337353	DIODE MA132K
D1004	5337354	DIODE MA133
D1005	5337353	DIODE MA132K
D1006	5337352	DIODE MA132WA
D1203	5337351	DIODE MA132WK
D1204	5337353	DIODE MA132K
D1206	5337031	DIODE 1SV201
D1207	5337353	DIODE MA132K
D1208	5337354	DIODE MA133
D1209	5337353	DIODE MA132K
D1901	5337353	DIODE MA132K
D1902	5337353	DIODE MA132K
D1903	5337353	DIODE MA132K
D1904	5337351	DIODE MA132WK
D1905	5337351	DIODE MA132WK
D1906	5337353	DIODE MA132K
D1907	5337351	DIODE MA132WK
D1908	5337353	DIODE MA132K
D1909	5337353	DIODE MA132K
D1910	5337351	DIODE MA132WK
D1911	5337353	DIODE MA132K
D1912	5337354	DIODE MA133
D1913	5337354	DIODE MA133
IC1201	1351532	IC CXD1250M
IC1202	1351521	IC UPD65025-025
IC1203	1351581	IC HA118120
IC1204	1350602	IC MN3817S
IC1205	5304141	IC HA118003M
IC1206	1351671	IC HA118142
IC1207	1350261	IC NJM2225M
IC1208	5355512	IC LM2904M
IC1210	1351681	IC NJM2256M
IC1211	1372683	IC HT5866B
IC1214	5367391	IC HA11883MP
IC1215	5352722	IC LM2903M
IC1901	1355379	IC UPD75008GB-610
IC1902	1352021	IC UPD6451A
IC1903	1351761	IC NJM2406F
Q1001	1323321	TRANSISTOR 2SD2216
Q1002	1323321	TRANSISTOR 2SD2216
Q1003	1323331	TRANSISTOR 2SA1806
Q1004	1323341	TRANSISTOR 2SC4691
Q1005	1323341	TRANSISTOR 2SC4691
Q1006	1323331	TRANSISTOR 2SA1806
Q1007	1323361	TRANSISTOR XP1501
Q1008	1323321	TRANSISTOR 2SD2216
Q1201	1323321	TRANSISTOR 2SD2216
Q1202	1323321	TRANSISTOR 2SD2216
Q1203	1323253	TRANSISTOR XP4401
Q1207	1323252	TRANSISTOR XP4501
Q1210	1323231	TRANSISTOR 2SB1462
Q1211	1323321	TRANSISTOR 2SD2216
Q1212	1323232	TRANSISTOR 2SB1462
Q1213	1323321	TRANSISTOR 2SD2216
Q1214	1323321	TRANSISTOR 2SD2216
Q1215	1323321	TRANSISTOR 2SD2216
Q1216	1323232	TRANSISTOR 2SB1462
Q1217	1323232	TRANSISTOR 2SB1462

SYMBOL-NO	P-NO	DISCRIPTION
Q1218	1323232	TRANSISTOR 2SB1462
Q1219	1323232	TRANSISTOR 2SB1462
Q1220	1323232	TRANSISTOR 2SB1462
Q1222	1323321	TRANSISTOR 2SD2216
Q1224	1323321	TRANSISTOR 2SD2216
Q1225	1323232	TRANSISTOR 2SB1462
Q1226	1323232	TRANSISTOR 2SB1462
Q1227	1323172	TRANSISTOR UN9113
Q1228	1323171	TRANSISTOR UN9213
Q1229	1323171	TRANSISTOR UN9213
Q1230	1323321	TRANSISTOR 2SD2216
Q1231	1323321	TRANSISTOR 2SD2216
Q1233	1323252	TRANSISTOR XP4501
Q1236	1323171	TRANSISTOR UN9213
Q1237	1323232	TRANSISTOR 2SB1462
Q1240	5326103	TRANSISTOR FMS1
Q1241	5326103	TRANSISTOR FMS1
Q1242	5326103	TRANSISTOR FMS1
Q1243	1323232	TRANSISTOR 2SB1462
Q1244	1323232	TRANSISTOR 2SB1462
Q1245	1323321	TRANSISTOR 2SD2216
Q1246	1323321	TRANSISTOR 2SD2216
Q1247	5326101	TRANSISTOR FMW1
Q1248	1323232	TRANSISTOR 2SB1462
Q1249	1323321	TRANSISTOR 2SD2216
Q1903	5326101	TRANSISTOR FMW1
Q1905	5326101	TRANSISTOR FMW1
Q1908	1323172	TRANSISTOR UN9113
L1001	5159242	CHOKE COIL 1.5UH
L1002	0773062	CHOKE COIL 10UH+-10%
L1201	5159242	CHOKE COIL 1.5UH
L1202	5159246	CHOKE COIL 10UH+-10%
L1203	0773004	COIL 100UH
L1204	0773003	COIL 47UH
L1205	0773087	CHOKE COIL 10UH+-10%
L1207	0773001	CHOCE COIL 10UH+-10%
L1208	5159246	CHOKE COIL 10UH+-10%
L1209	5159246	CHOKE COIL 10UH+-10%
L1210	5159231	COIL 100UH+-10%
L1901	5159246	CHOKE COIL 10UH+-10%
L1903	5159246	CHOKE COIL 10UH+-10%
X1201	5778441	CRYSTAL
X1901	5783001	CRYSTAL
X1902	5778261	CRYSTAL
CP1901	5172136	FILTER
DL1201	5172174	DELAY LINE
DL1202	5172043	FILTER,LOW PASS

ELECTRONIC VIEWFINDER SECTION

C 801	0255134	ELECTROLYTIC 47UF 16V
C 802	0255134	ELECTROLYTIC 47UF 16V
C 804	0268459	CAPACITOR 2700PF+-5% 100V
C 805	0256871	ELECTROLYTIC 47UF 25V
C 806	0249655	CERAMIC DISC 1000PF+-10% 1KV
C 807	0249656	CERAMIC DISC 1000PF+-10% 500V
C 808	0256752	ELECTROLYTIC 3.3UF 63V
C 809	0201997	CERAMIC DISC 0.1UF+80-20% 50V
C 811	0201036	CERAMIC CHIP 270PF+-5% 50V
C 812	0201997	CERAMIC DISC 0.1UF+80-20% 50V
C 814	0201069	CERAMIC CHIP 0.1UF+80-20% 25V
C 815	0268521	POLYESTER 0.1UF+-10% 50V
C 816	0202151	CERAMIC CHIP 2200PF+-5% 50V
C 817	0201007	CERAMIC CHIP 0.01UF+-20% 50V
C 819	0202146	AHIP CERAMIC 1.0UF+80-20% 16V
R 801	0103852	CHIP RESISTOR 5.6KOHM+-5% 0.1W

SYMBOL-NO	P-NO	DISCRIPTION
R 802	0103879	CHIP RESISTOR 1MOHM+-5% 0.1W
R 803	0103875	CHIP RESISTOR 470KOHM+-5% 0.1W
R 804	0103881	CHIP RESISTOR 2.2MOHM+-10% 0.1W
R 805	0103881	CHIP RESISTOR 2.2MOHM+-10% 0.1W
R 806	0103817	CHIP RESISTOR 6.8OHM+-10% 0.1W
R 807	0103879	CHIP RESISTOR 1MOHM+-5% 0.1W
R 808	0103879	CHIP RESISTOR 1MOHM+-5% 0.1W
R 809	0103862	CHIP RESISTOR 39KOHM+-5% 0.1W
R 810	0103859	CHIP RESISTOR 22KOHM+-5% 0.1W
R 811	0103844	CHIP RESISTOR 1.2KOHM+-5% 0.1W
R 812	0103857	CHIP RESISTOR 15KOHM+-5% 0.1W
R 813	0103846	CHIP RESISTOR 1.8KOHM+-5% 0.1W
R 814	0103843	CHIP RESISTOR 1KOHM+-5% 0.1W
R 815	0103862	CHIP RESISTOR 39KOHM+-5% 0.1W
R 816	0103814	CHIP RESISTOR 3.9OHM+-5% 0.1W
R 817	0103840	CHIP RESISTOR 560 OHM+-5% 0.1W
R 818	0103863	CHIP RESISTOR 47KOHM+-5% 0.1W
R 819	0103848	CHIP RESISTOR 2.7KOHM+-5% 0.1W
R 820	0103867	CHIP RESISTOR 100KOHM+-5% 0.1W
R 821	0103843	CHIP RESISTOR 1KOHM+-5% 0.1W
R 822	0103831	CHIP RESISTOR 100 OHM+-5% 0.1W
R 823	0103835	CHIP RESISTOR 220 OHM+-5% 0.1W
R 826	0103876	CHIP RESISTOR 560KOHM+-5% 0.1W
R 827	0103838	CHIP RESISTOR 390 OHM+-5% 0.1W
R 828	0103843	CHIP RESISTOR 1KOHM+-5% 0.1W
RT 802	5030193	SEMI VARIABLE 470 OHM
RT 803	5007793	SEMI VARIABLE 2.2MOHM
RT 805	5007468	SEMI VARIABLE 1MOHM
D 801	5328321	DIODE MA151K (MH)
D 802	5337321	DIODE MA199
D 803	5381669	DIDOE SLH34VC3F
IC 801	1351631	IC HA118121FP
Q 801	1323131	TRANSISTOR 2SD968A (R/S)
Q 802	5328241	TRANSISTOR 2SC2463E(DE)
Q 803	5326254	TRANSISTOR DTC143TK
T 801	5240484	TRANSFORMER, FLYBACK
L 801	0773003	COIL
L 802	5244012	COIL
CS 801	5886235	SOCKET

VM-E10A(U,C)

HITACHI

HITACHI SALES CORPORATION OF AMERICA
Eastern Regional Office
1290 Wall Stree West, Lydhurst, New Jersey 07071, U.S.A.
Tel. 201-935-8980

Mid-Western Regional Office
1400 Morse Ave., Elk Grove Village, Illinois 60007, U.S.A.
Tel. 312-593-1550

Southern Regional Office
510 Plaza Drive, College Park, Georgia 30349, U.S.A.
Tel. 404-763-0360

Headquarters, Western Regional Office
401 West Artesia Blvd.,Compton, California 90220 U.S.A.
Tel. 213-537-8383

HITACHI SALES CORPORATION OF HAWAII, INC.
3219 Koapaka Street. Honolulu, Hawaii 96819, U.S.A.
Tel. 808-836-3621

HITACHI (HSC) CANADA INC.
3300 Trans-Canada Highway, Pointe Claire, Quebec,
H9R 1B1, Canada
Tel. 514-697-9150

HITACHI SALES CENTROAMERICANA, S.A.
San Rafael de Escazu, (Apartado 10272-1000), San Jose,
Costa Rica
Tel. 28-20-11, 28-00-37

HITACHI SALES CORPORATION DE PANAMA, S.A.
Balboa Avenue (end), in front of Mothers' Commemorative
Park, San Francisco, Apartado Postal 7657, Panamá 5,
Panamá City, Republic of Panamá
Tel. 63-6500, 63-6491

HITACHI SALES CORPORATION. TOKYO JAPAN
Head Office: THE HITACHI ATAGO BLDG.
No. 15-12, 2-Chome Nishi-Shinbashi
Minato-Ku, Tokyo 105, Japan
Tel. Tokyo (03) 502-2111

VM-E10A(U,C)

VM-E10A(U,C) **TK** **No.3372E** **TOKAI** AI

Copyright © Hitachi, Ltd. 1990. All rights reserved. Printed in Japan (K)